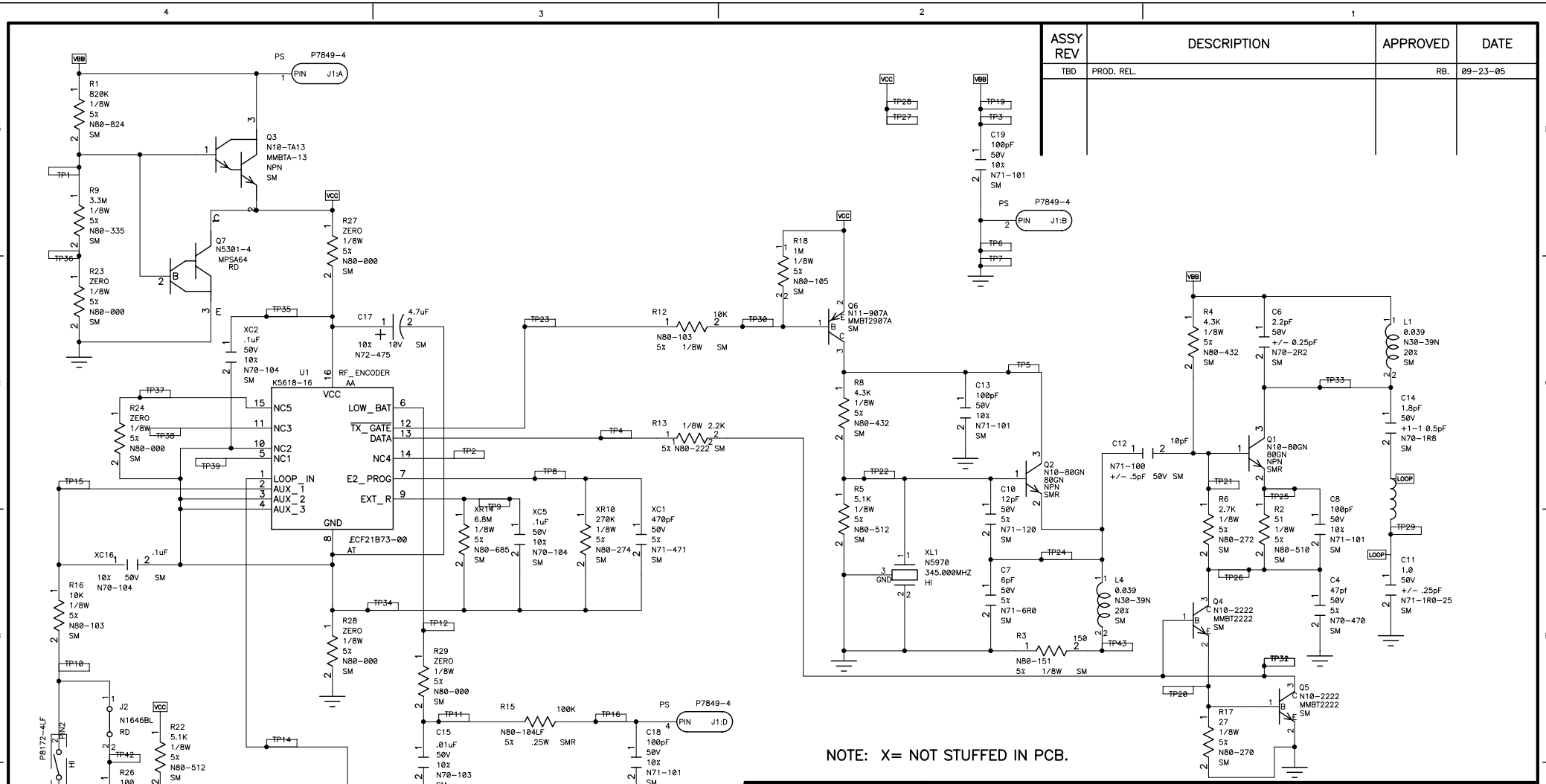

ASSY REV	DESCRIPTION	APPROVED	DATE
TBD	PROD. REL.	RB.	09-23-05

NOTE: X= NOT STUFFED IN PCB.

APPROVALS	DATE
PROJECT ENG.	
ELECTRICAL ENG.	
MFG. ENG.	
IN CIRCUIT TEST ENGR.	
FUNCTIONAL TEST ENGR.	
CREATED BY:	

Honeywell 165 EILEEN WAY SYOSSET, NEW YORK 11791

PCB (REF)	N8934 REV.A1
TITLE	SCHEMATIC SMOKE DETECT
DRAWING NUMBER	SA5806-2
COMPUTER FILE NAME	SA5806-2.SCH
DATE: 11-06-92	SHEET 1 OF 1