ASSY REV	DESCRIPTION	DATE	APPROVED
1	PRODUCTION RELEASE	08-09-02	RB.

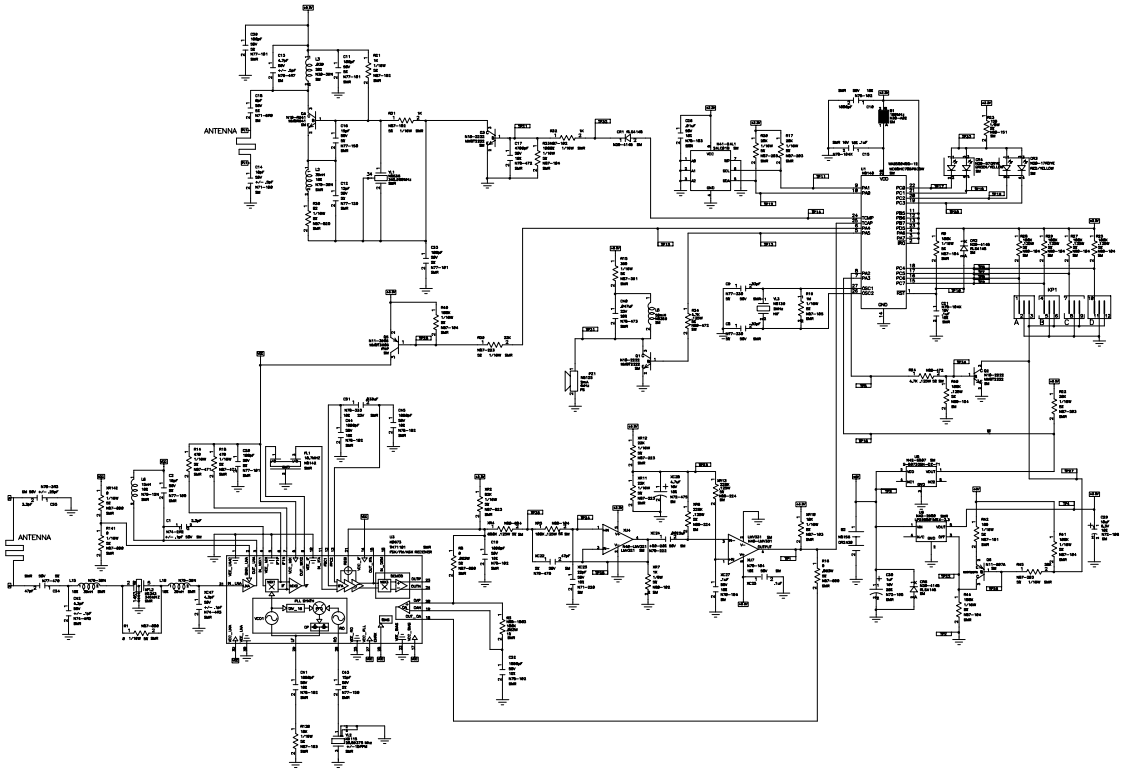

* INDICATES COMPONENT NOT STUFFED.

ASSEMBLIES	LAST USED	DO NOT USE	APPROVALS	DATE
SA	C TB CR U FL W L XL Q Z R TP SW	‡**	DRAWN BY D. Schmitz	7/30/02
			DESIGNED BY	
			APPROVED BY	

ADEMCO
165 EILEEN WAY
SYOSSET, NEW YORK 11791

PCB (REF) N8283V2 REV. B

TITLE SCHEMATIC, 5804 WIRELESS KEYFOB

DRAWING NUMBER SA5804BD-MX

COMPUTER FILE NAME SA5804BD-MX.SCH

DATE: 7/30/02 SHEET 1 OF 1