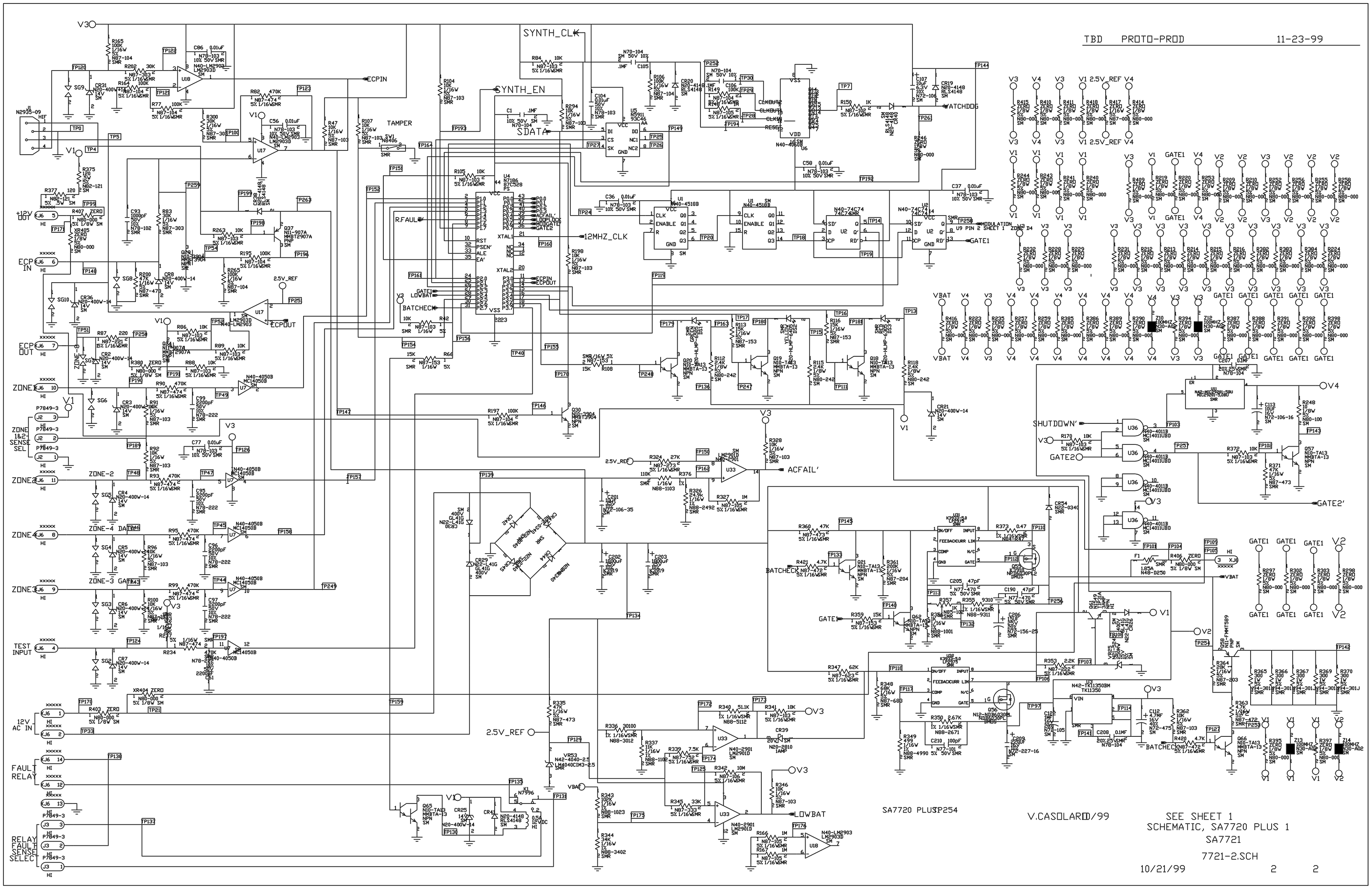
TBD PROTO-PROD 11-23-99
SYNTH_CLK
SYNTH_EN
SDATA
ECPIN
TAMPER
WATCHDOG
R.FAULT
12MHZ_CLK
ECPOUT
BATCHECK
LOWBAT
ACFAIL'
SHUTDOWN'
GATE2
GATE2'
GATE1
MODULATION
ZONE-2
ZONE-4
ZONE-3
TEST INPUT
12V AC IN
FAULT RELAY
RELAY FAULT SENSE SELECT
ZONE 1&2 SENSE SEL
SA7720 PLUS
V.CASOLARI 10/99
SEE SHEET 1
SCHEMATIC, SA7720 PLUS 1
SA7721
7721-2.SCH
10/21/99 2 2