REV		PROJ STAGE	CHANGE BY	APPROVE BY	EFFECT DATE
02	Chang R21=2.2K to 10K;R8=1k to 820;R14=750 to 680; C20=0.1uF to 0.22uF;C14=1uF to 0.1uF,C1=180 to 150PF,C9=18 to 200pF,C12=68 to 150pF,R4=430K to 200K,L2=1.2uH to 1uH; ADD R37=12;	FEP	lth	lth	
03	ADD R13=2.2, C25=2.2uF, C24=200PF; Del FR3, C23=100PF,R35=100K,C14=0.1uF,C20=0.22uF; R21=10K to 15K,R4=200K to 430K, R3=100K to 270K,R8=1K ,R14=1.5K, R6=150.	FEP	lth	lth	

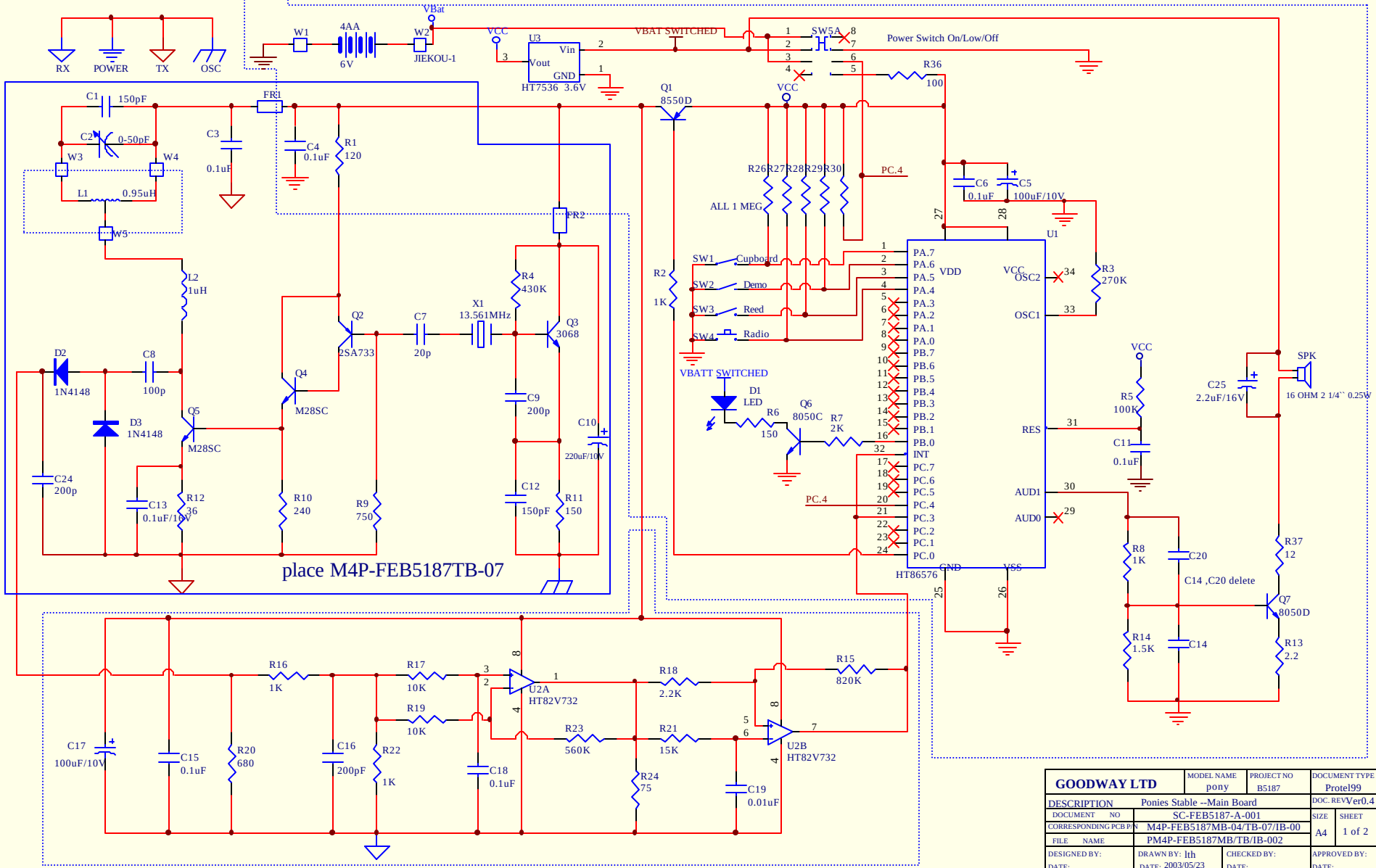

GOODWAY LTD	MODEL NAME pony	PROJECT NO B5187	DOCUMENT TYPE Protel99
DESCRIPTION	Ponies Stable --Main Board		DOC. REV Ver0.4
DOCUMENT NO	SC-FEB5187-A-001		SIZE A4 / SHEET 1 of 2
CORRESPONDING PCB P/N	M4P-FEB5187MB-04/TB-07/IB-00		
FILE NAME	PM4P-FEB5187MB/TB/IB-002		
DESIGNED BY: DATE:	DRAWN BY: lth DATE: 2003/05/23	CHECKED BY: DATE:	APPROVED BY: DATE: