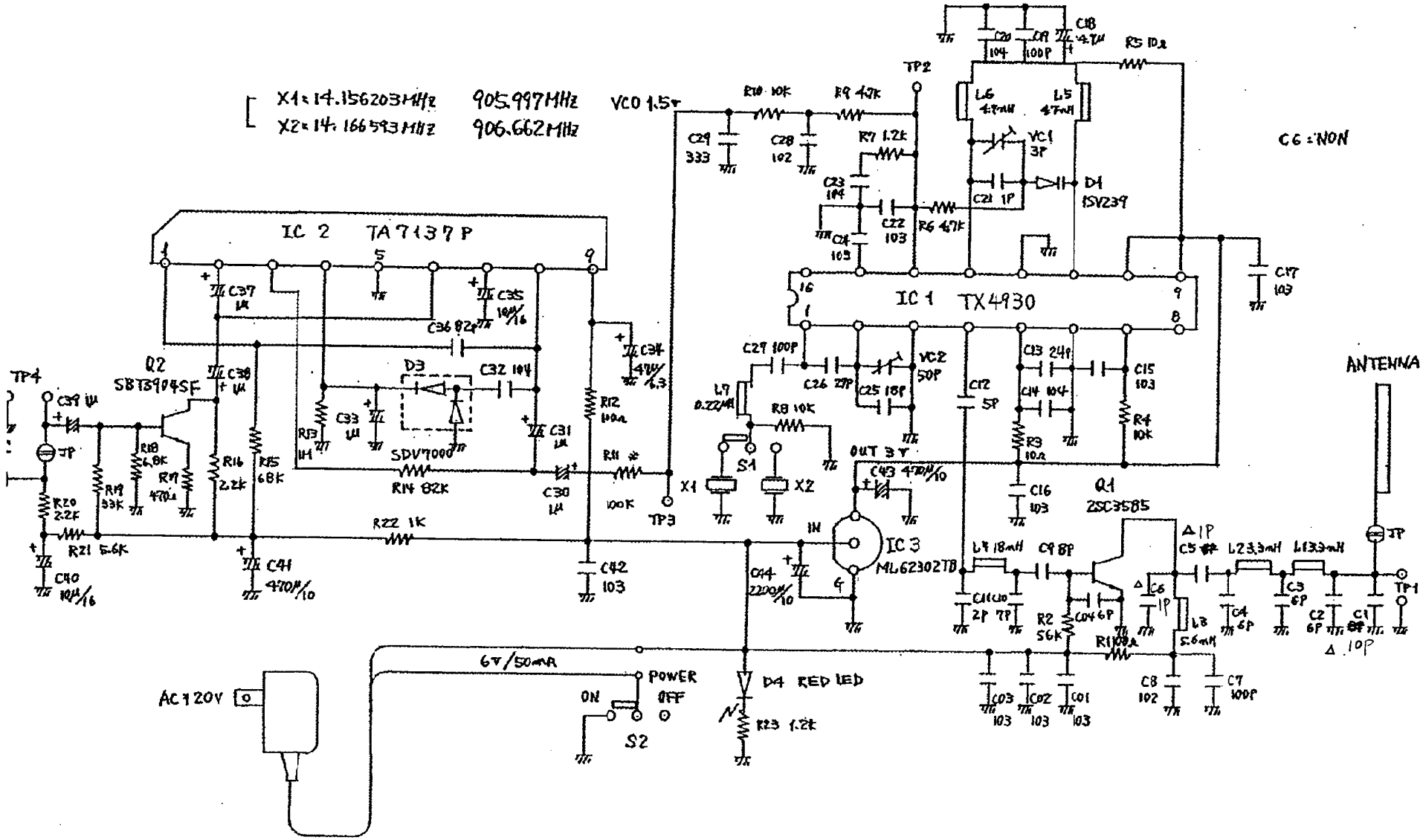

B1474 900MHz TRANSMITTER CIRCUIT DIAGRM

16 Mar 2004 R.1

(G4594)