3/8/99

2911 RC STUNT ROADWAY FCC SCHEMATIC

R4 CHANGED FROM 180 TO 680 FOR FCC COMPLIANCE

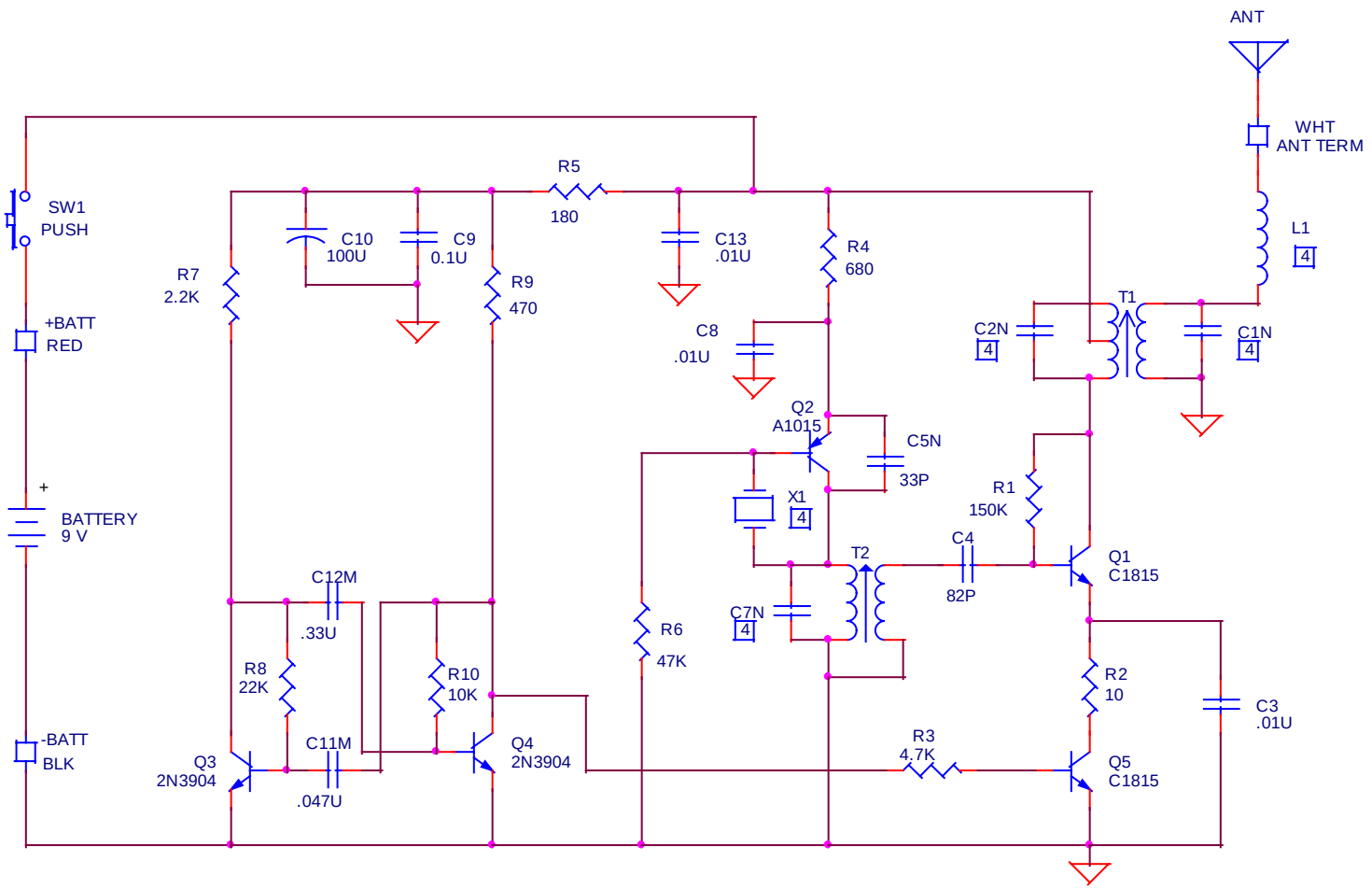

4 COMPONENT VALUES VERSUS FREQ BAND

X1	49.860MHZ	40.680MHZ	27.145MHZ
L1	2.7UH	3.9UH	5.6UH
C1	12PF	18PF	47PF
C2	10PF	12PF	33PF
C7	22PF	47PF	75PF

CRITICAL COMPONENTS:

Q1,5	2SC1815 (ECB)
Q2	2SA1015 (ECB)
Q3,4	2N3904

NOTES :

1. RESISTORS IN OHMS, CAPACITORS IN FARADS
2. CXN DENOTES NPO, CXM DENOTES 10% MYLAR
3. [ ] DENOTES TERMINAL ON PC BOARD
4. VALUE AS SHOWN IN COMPONENT TABLE BELOW

CHANGES:
R4 180 to 680

LAST COMP NO USED

R10	X1
C13 EX C6	L1
Q5	T2

FISHER PRICE INC.

DWN J.Davis

Title
RC STUNT ROADWAY (TRANSMITTER) - FINAL RELEASE

Size	Document Number	Rev
A	2911txB.SCH	B

Date: Monday, March 08, 1999 Sheet 1 of 1