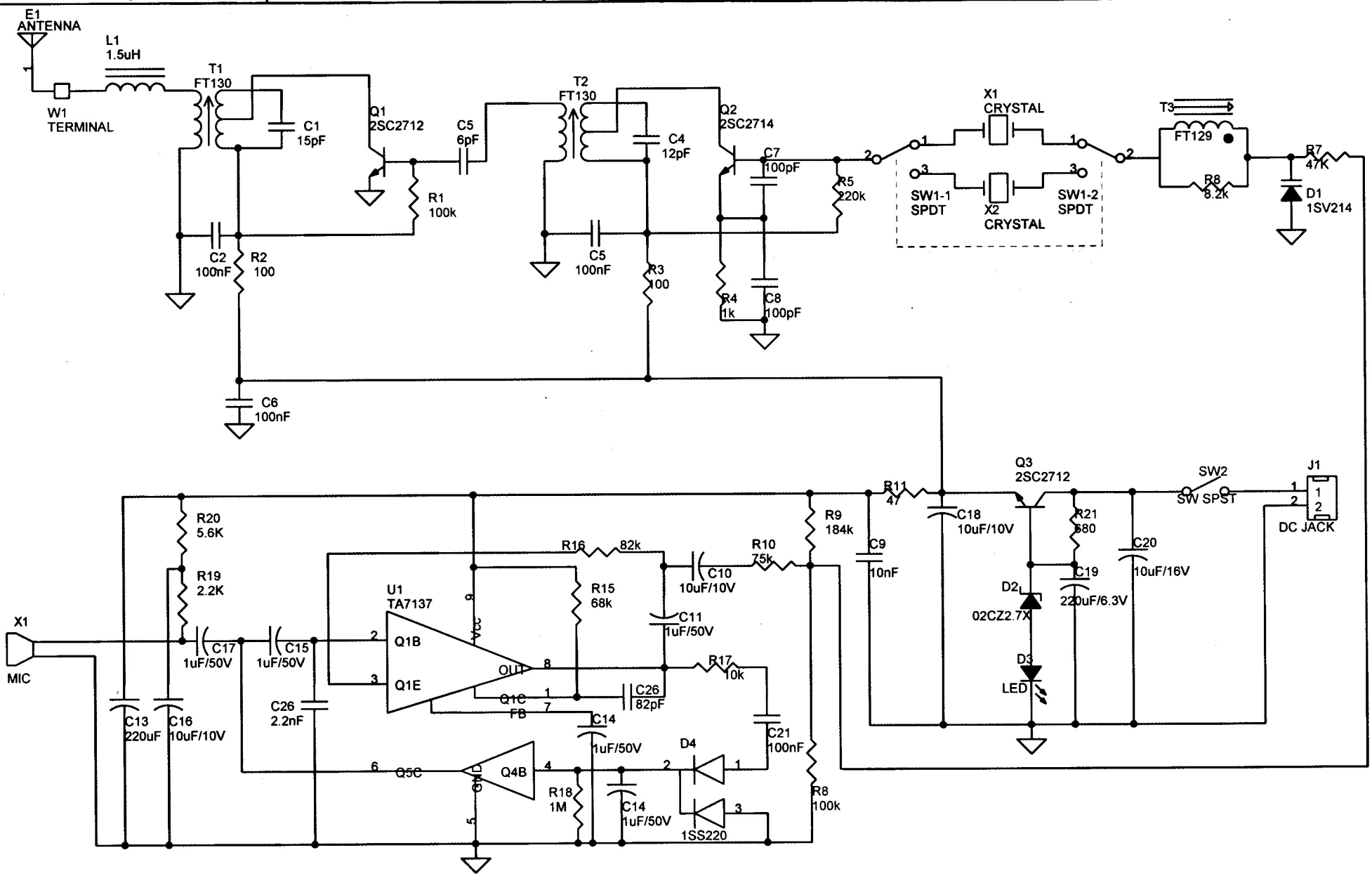

Notes:

1)Resistors in OHMS, Capacitors in FARADS: unless otherwise noted.

2)☐ -Denotes wire terminal on PCBA, Indicating Off-Board Component(s)

3) R11 1/8 Watt or larger. All others 1/16 Watt or larger.

Critical Components:

Revisions:

FISHER - PRICE 636 GIRARD AVE. EAST AURORA NY 14052

Title: 71584 Transmitter

Size: A

Document Number: 1x1584.sch

Rev: -

Date: Wednesday, September 08, 1999

Sheet 1 of 1