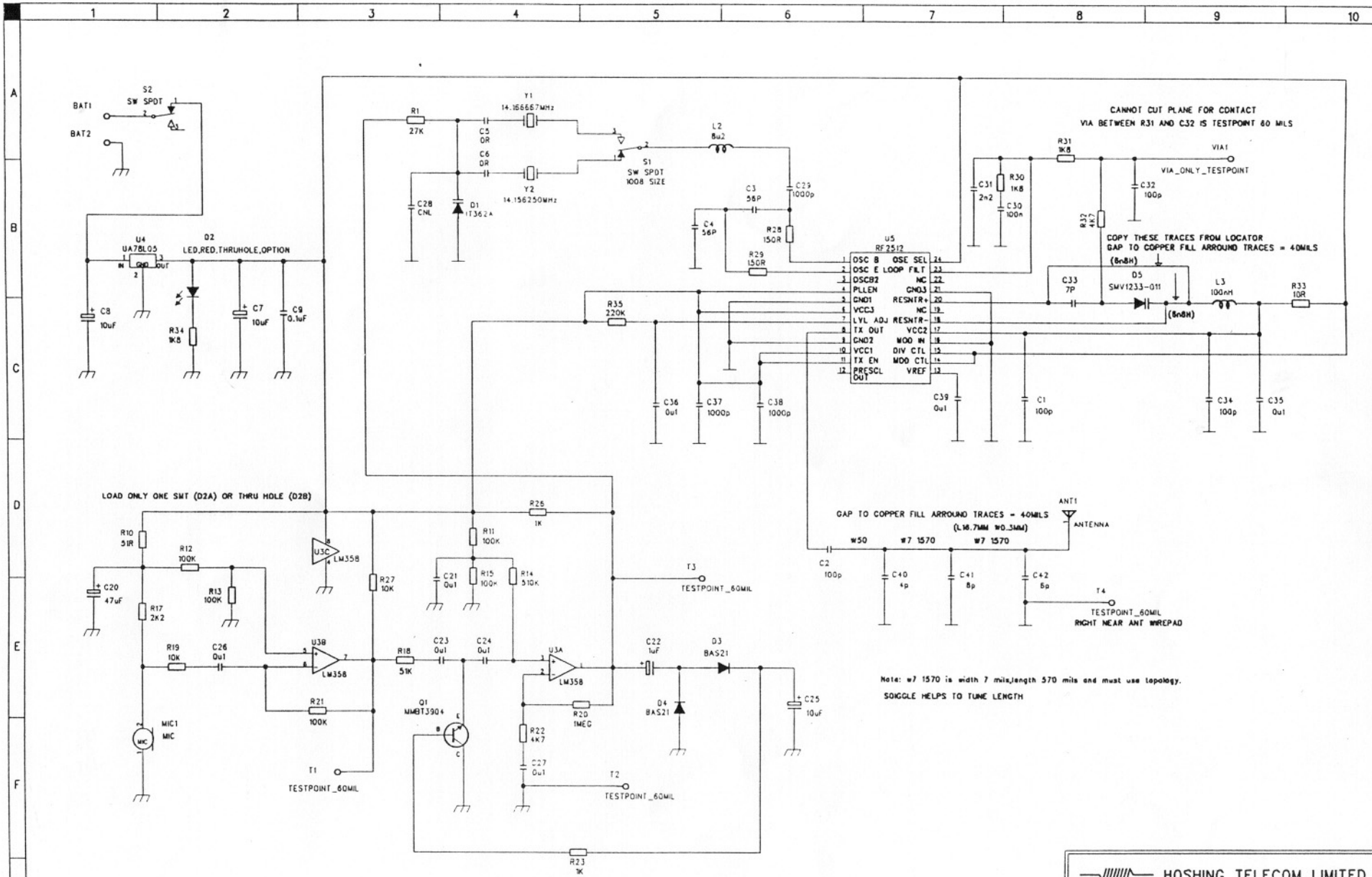
S2
SW SPDT
BAT1
BAT2
U4
UA78L05
IN
GND
OUT
D2
LED,RED,THRUHOLE,OPTION
C8
10uF
R34
1K8
C7
10uF
C9
0.1uF
R1
27K
C5
0R
C6
0R
Y1
14.166667MHz
Y2
14.156250MHz
C28
CNL
D1
1T362A
S1
SW SPDT
1008 SIZE
L2
8u2
C3
56P
C29
1000p
C4
56P
R28
150R
R29
150R
U5
RF2512
OSC B
OSC E
OSCB2
PLLEN
GND1
VCC3
LYL ADJ
TX OUT
GND2
VCC1
TX EN
PRESCL OUT
OSE SEL
LOOP FILT
NC
GND3
RESNTR+
NC
RESNTR-
VCC2
MOD IN
DIV CTL
MOD CTL
VREF
CANNOT CUT PLANE FOR CONTACT
VIA BETWEEN R31 AND C32 IS TESTPOINT 60 MILS
R31
1K8
VIA1
VIA_ONLY_TESTPOINT
C31
2n2
R30
1K8
C30
100n
C32
100p
R32
4K7
COPY THESE TRACES FROM LOCATOR
GAP TO COPPER FILL ARROUND TRACES = 40MILS
(8n8H)
C33
7P
D5
SMV1233-011
(8n8H)
L3
100nH
R33
10R
R35
220K
C36
0u1
C37
1000p
C38
1000p
C39
0u1
C1
100p
C34
100p
C35
0u1
LOAD ONLY ONE SMT (D2A) OR THRU HOLE (D2B)
R10
51R
R12
100K
C20
47uF
R13
100K
R17
2K2
U3C
LM358
R27
10K
R26
1K
R11
100K
C21
0u1
R15
100K
R14
510K
T3
TESTPOINT_60MIL
GAP TO COPPER FILL ARROUND TRACES = 40MILS
(L16.7MM W0.3MM)
w50
w7 1570
w7 1570
ANT1
ANTENNA
C2
100p
C40
4p
C41
8p
C42
6p
T4
TESTPOINT_60MIL
RIGHT NEAR ANT WREPAD
R19
10K
C26
0u1
U3B
LM358
R18
51K
C23
0u1
C24
0u1
U3A
LM358
C22
1uF
D3
BAS21
D4
BAS21
C25
10uF
R21
100K
MIC1
MIC
Q1
MMBT3904
R20
1MEG
R22
4K7
C27
0u1
T1
TESTPOINT_60MIL
T2
TESTPOINT_60MIL
R23
1K
Note: w7 1570 is width 7 mils,length 570 mils and must use topology.
SOIGGLE HELPS TO TUNE LENGTH
HOSHING TELECOM LIMITED
MODEL: 6217 TX SCHEMATIC DIAGRAM
REV: 2.0
DWN NO: 29-5144
CUSTOMER MODEL: 71580
DWN BY: K.C.LEUNG
STATUS:
PAGE:1/1
CHECK BY:
PART NO:090-621702-02
DATE: 28 JULY 99
APP'D BY:

1580 Tx