BILL OF MATERIALS					
ITEM	U/M	QUAN	SYM	PART NUMBER	DESCRIPTION
1	EA	1	S	30-00-0-027	CASE BOT JOYSTICK XMTR
2	EA	1	S	30-00-0-029	XMTR RETAINER PLATE FOR PWB
3	EA	1	S	30-00-0-030	BTRY DISK JOYSTICK XMTR
4	EA	1	S	91-01-0-093	ASSY 4CNDTR BTRY INTFC 1.8X.9
5	EA	6	S	37-62-0-001	EXPANDING INSERT #4 BRASS
6	EA	1	S	37-62-0-002	EXPANDING INSERT #6X.25 BRASS
7	EA	3	S	09-51-0-001	FD THRU .136DIA SLDR TUR .35LG
8	EA	1	S	0902-0160	SCREW 6-32 X 3/8,PHH,TRH,SST
9	EA	1	S	0808-0350	WSHR NO.6, NAR, FLAT, ZNPL
10	EA	1	S	44-02-0-002	SPACER #6X1/4ODX3/16LG LDPE
11	EA	2	S	0901-0130	SCREW 4-40 X 1/4, 82DEG, FLH
12	IN	7.5	S	0080-0100	WIRE STRD, #22, RED
13	IN	7.5	S	0080-0040	WIRE STRD, #22, BLACK
14	IN	7.5	S	0080-0120	WIRE STRD, #22, WHITE
15	EA	3	S	09-31-0-009	CONN FEMALE CRP 1PIN 20-24AWG
16	EA	1	S	09-30-0-029	CONN HSG CRP SR 3MM 04P
17	EA	1	S	96-00-1-XXX	LBL FCC ID 450MHZ ADV LJ

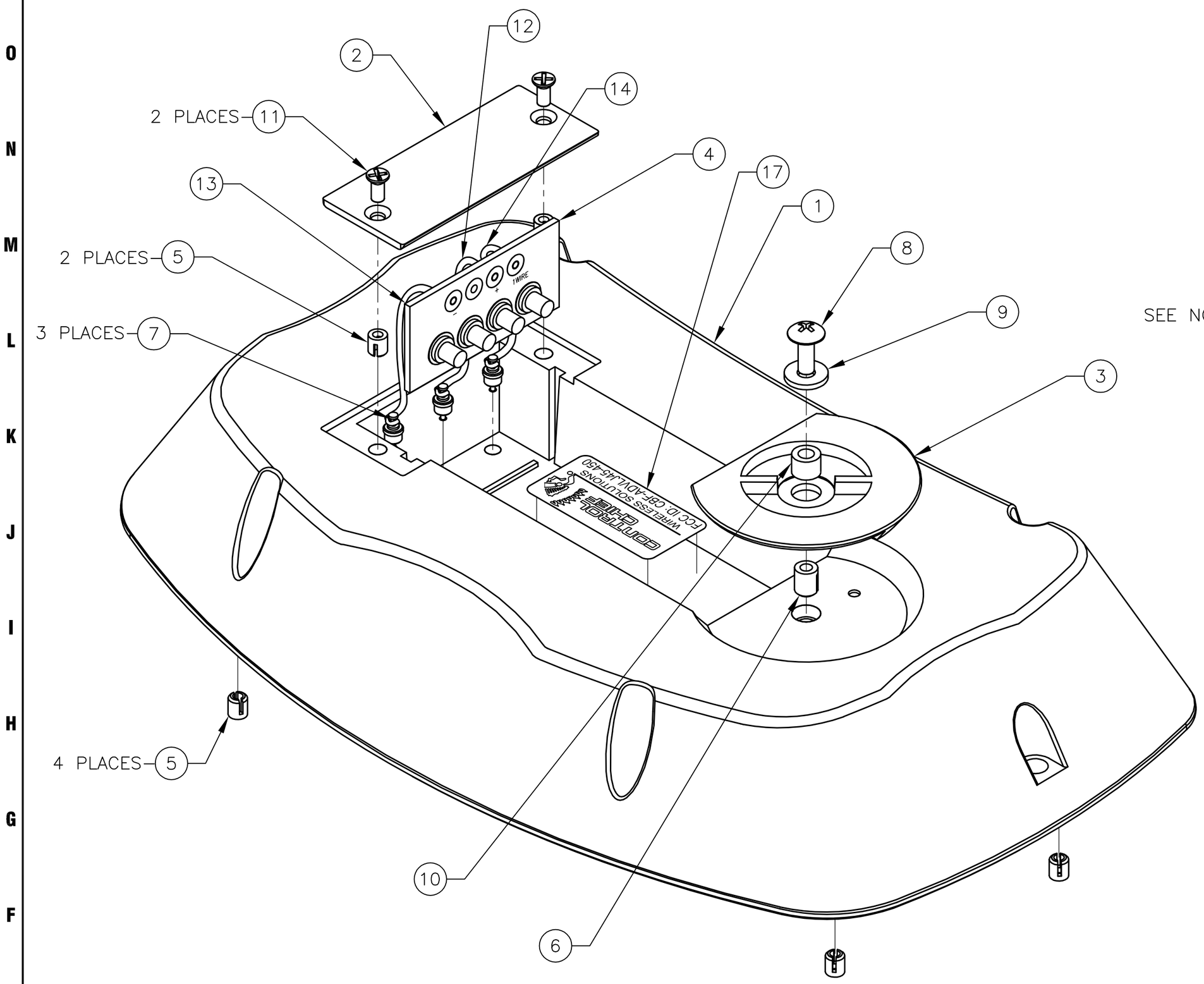

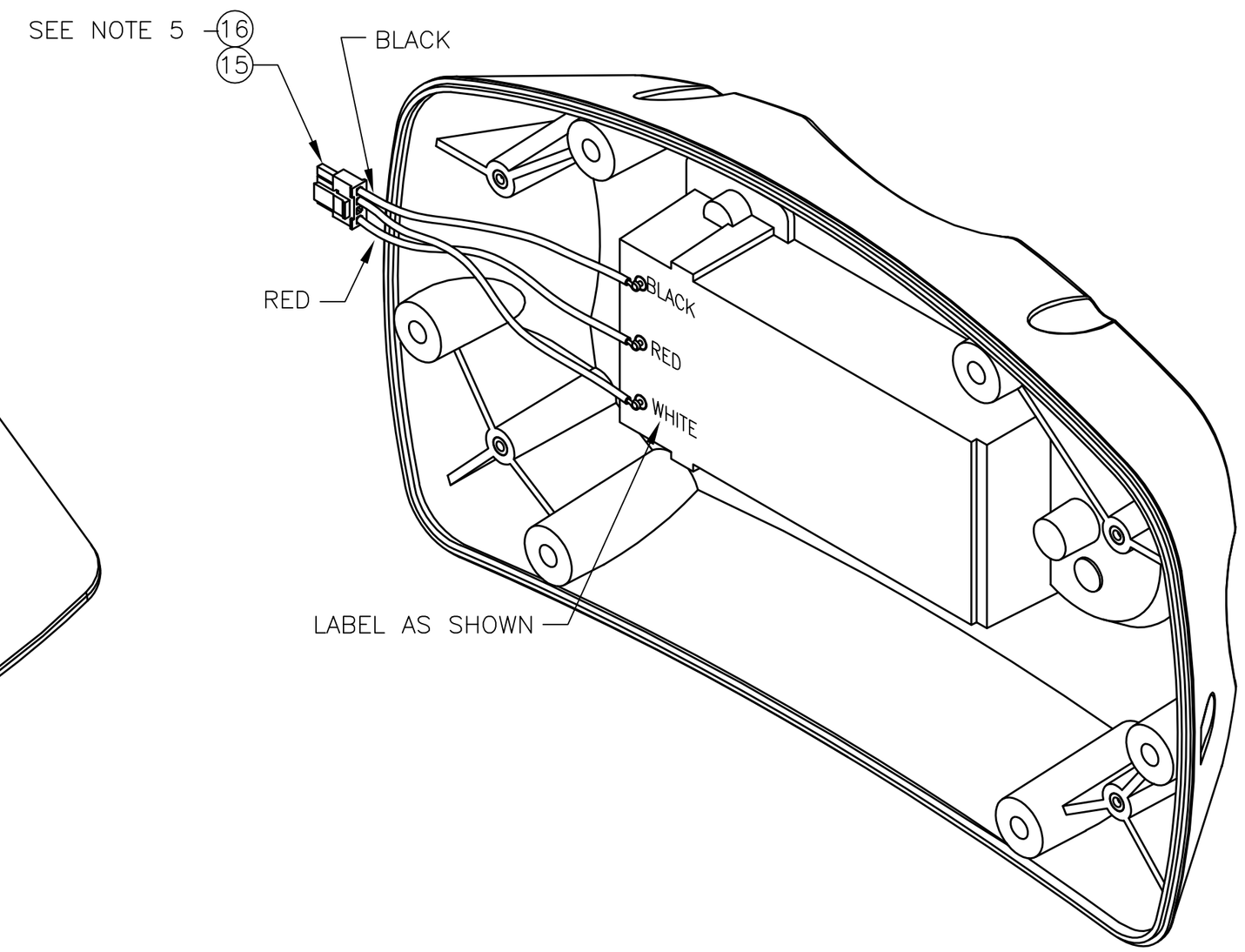

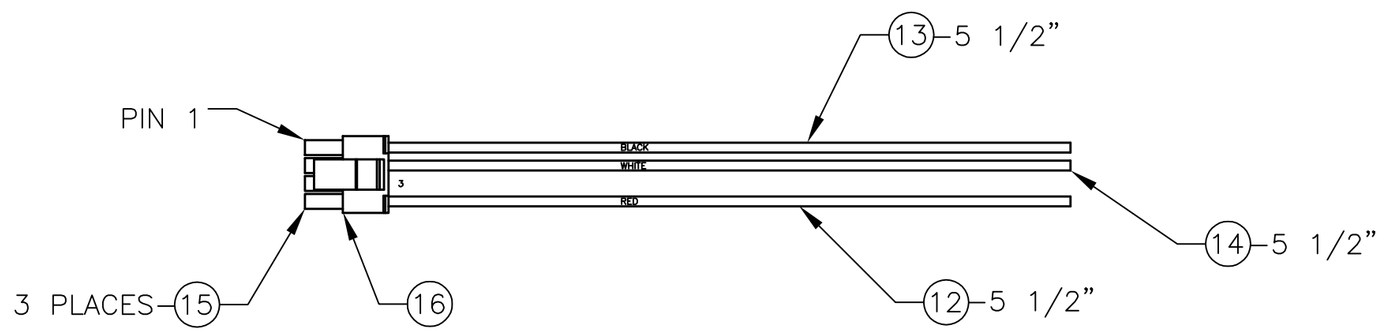

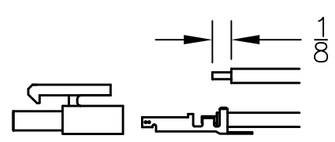

DETAIL A

SEE NOTE 5

NOTES:

1) INSTALL INSERTS, ITEMS 5 AND 6 INTO CASE FIRST.
2) INSTALL FEED THRU TURRETS, ITEM 7 INTO CASE AS SHOWN.
3) WIRE PWB ASSY TO TURRETS AS SHOWN.
4) TUCK WIRE IN BEHIND PWB ASSY BEFORE INSTALLING COVER PLATE, ITEM 2.
5) USE CRIMP TOOL MOLEX 638112800 FOR ASSEMBLY AND SOLDER HARNESS TO SOLDER TURRETS ITEM 7.

REV	DCN#	DESCRIPTION	DATE	INIT
01	–	–	07/27/06	JPN

REVISIONS

THIRD ANGLE PROJECTION

TOLERENCES, UNLESS OTHERWISE NOTED:
X±.1 XX±.02 XXX±.005
X/X±1/32 ∠±.5°
ALL DIMENSIONS ARE IN INCHES, UNLESS OTHERWISE NOTED

DESCRIPTION: CASE BOTTOM ASSY ADVANTAGE
LONG DESCRIPTION: CASE BOTTOM ASSEMBLY
PART DESCRIPTION:
CASE BOTTOM ASSEMBLY ADVANTAGE SERIES TRANSMITTER

DWN BY: J. NEEL	DATE: 12/19/05	FINISH: N/A
CHK BY:	DATE:	
APVD BY:	DATE:	
SCALE: N.T.S.	SHEET: 1 OF 1	

CONFIDENTIAL
THIS DOCUMENT IS PROPRIETARY TO CONTROL CHIEF CORPORATION. IT MAY NOT BE COPIED, DISSEMINATED OR USED, OR ITS CONTENTS DISCLOSED, WITHOUT THE PRIOR WRITTEN PERMISSION OF CONTROL CHIEF CORPORATION.

CONTROL CHIEF
WIRELESS SOLUTIONS
COPYRIGHT © 1998 CONTROL CHIEF CORPORATION
BRADFORD, PENNSYLVANIA

DWG# 91-04-0-XXX REV: 01

S/C:91-04-0-XXX