DWG. NO. VJ2686

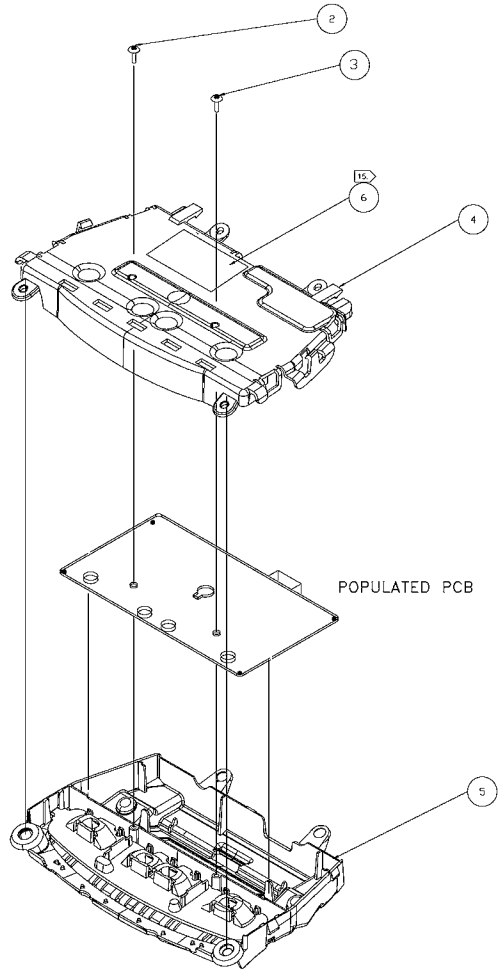

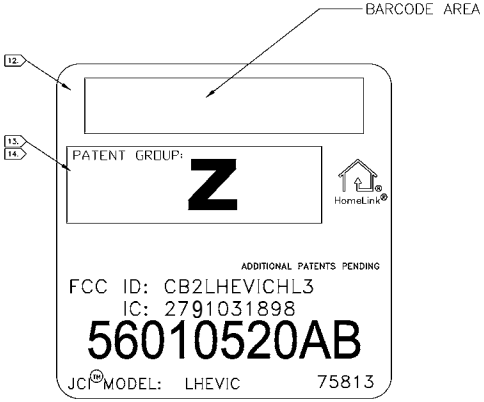

REVISION SUCH

REV	DEV. ITEM	DESCRIPTION	P.C.N.	BY	DATE	BY

JOHNSON CONTROLS
AUTOMOTIVE SYSTEMS GROUP INTERIORS

NAME: PCB ASSEMBLY

ELECTRONICS STD. UNLESS OTHERWISE SPECIFIED

THIRD ANGLE PROJECTION

DO NOT SCALE

X.X DECIMAL ± 0.040 [± 1.0]
X.XX DECIMAL ± 0.020 [± .50]
X.XXX DECIMAL ± 0.006 [± .15]

ANGULAR ± 2° 0'
DRAFT ANGLES NOTED

DIMENSIONS ARE INCHES WITH EQUIVALENT MILLIMETERS SHOWN IN BRACKETS.

PROJECT: 05 KJ EVIC HMLK III	DRWN. BY	DATE	
	CHKD. BY	DATE	
CUSTOMER: DAIMLERCHRYSLER	ENGR. APPR	DATE	
	SCALE: NONE	SHEET 4 OF 4	
SIZE: D	TOOL NO. REF.	DWG. NO. VT5388	REV. C
	DATA FORMAT: ACAD		