LABORATORY TEST REPORT

TEST: FCC 47 CFR 1.1310 Maximum Permissible Exposure (MPE)

MPE ASSESSMENT

For the UHF 25 Watts Mobile Transceiver Type TMBH5A
FCC ID: CASTMBH5A
IC: 737A-TMBH5A

In accordance with

ANSI/IEEE Std C95.1, 1999

OET Bulletin 65 97-01 and Supplement C (Edition 01-01)

DATE:	August 2013	
PREPARED BY:	Marcus Ludwig	
		Test Technician
CHECKED & APPROVED BY:	Mike James	
		Laboratory Technical Manager

This document must not be reproduced except in full, without the written permission of the Compliance Laboratory Manager.

TELTEST Laboratories – A Division of Tait Limited
PO Box 1645, 558 Wairakei Road, Christchurch, New Zealand
Telephone: 64 3 358 3399,
Fax: 64 3 359 4632

Contents

CONTENTS 2
SUMMARY OF RESULTS: 2
OPERATING AND EXPOSURE CONDITIONS: 3
LIMIT: 3
RECOMMENDED ANTENNAS: 3
MEASUREMENT GUIDANCE: 3
TEST RESULTS: 4
INFORMATION TO BE PLACED IN USER/INSTALLATION MANUAL: 6
APPENDIX 1 8

Summary of Results:

Limit: 300 – 1500 MHz
Occupational/Controlled Exposure f/300mW/cm^2
General Population/ Uncontrolled Exposure f/1500 mW/cm^2

Antenna Gain	Antenna Position	Measurement Position	Result
2.15 dBi	Roof	A External: Side	COMPLIES
5.15 dBi	Roof	A External: Side	COMPLIES
2.15 dBi	Trunk	C External: Rear	COMPLIES
5.15 dBi	Trunk	C External: Rear	COMPLIES
2.15 dBi	Trunk	B External: 45 degrees	COMPLIES
5.15 dBi	Trunk	B External: 45 degrees	COMPLIES
2.15 dBi	Trunk	Internal: Centre Rear	COMPLIES
5.15 dBi	Trunk	Internal: Centre Rear	COMPLIES
2.15 dBi	Roof	Internal: Front Seat	COMPLIES
5.15 dBi	Roof	Internal: Front Seat	COMPLIES
2.15 dBi	Roof	Internal: Back Seat	COMPLIES
5.15 dBi	Roof	Internal: Back Seat	COMPLIES

See Appendix A for details of the measurement positions.

Operating and Exposure Conditions:

Operating Conditions:	Mobile transmitter using vehicle mounted antennas only.
Exposure conditions:	Occupational/Controlled Exposure (operator). General Population/Uncontrolled (passengers and bystanders)
Safe Distance:	Recommended minimum lateral safe distance from the antenna: 90 cm

Limit: 47 cfr 1.1310

	400MHz	463.5MHz (Test Frequency)	470MHz
Occupational/Controlled Exposure: f/300 mW/cm^2	1.3mW/cm^2	1.5mW/cm^2	1.6mW/cm^2
General population/Uncontrolled Exposure: f/1500 mW/cm^2	0.27mW/cm^2	0.31mW/cm^2	0.31mW/cm^2

Recommended Antennas:

Antenna Type	**Antenna Gain**
Monopole (λ/4 antenna)	2.15 dBi
Monopole (5/8λ antenna)	5.15 dBi

Measurement Guidance:

Federal Communications Commission OET Laboratory Division
KDB 447498 v05, 643646 DR02.

Per definition of a mobile device a minimum separation distance of 20 cm is required.
The minimum separation distances required to install an antenna on a vehicle must be larger than those tested for compliance and must be disclosed separately to antenna installers and radio operators to ensure compliance.
A separation distance based on MPE evaluation (measurement or computer modelling) that is smaller than the estimated MPE distance may be used if it is applicable for the antenna installation conditions.
A mid-sized sedan was used for the testing so that the results can be applied to a larger vehicle resulting in conservative exposure conditions. The roof antenna position tested is closer to bystanders than if it were mounted centrally (as recommended in the installation instructions) in order to ensure that even on small vehicle the separation distance is more conservative than the tested distance and to allow a test position that conforms to the requirements of KDB 643646 DR02.

Test Results:

NAME OF TEST: TRANSMITTER OUTPUT POWER (CONDUCTED)

SPECIFICATION: FCC 47 CFR 2.1046

GUIDE: TIA/EIA-603D 2.2.1

MEASUREMENT PROCEDURE:
1. The Equipment Under Test (EUT) was connected to an RF power meter using a coaxial attenuator with an impedance of 50 Ohms.
2. The unmodulated output power was measured.

MEASUREMENT RESULTS:

Transmit Frequency:	463.5	MHz
Supply Voltage:	13.8	Volts
Measured Output Power:	4.9	Watts
Measurement Uncertainty (dB):	± 0.5	dB

The MPE results are scaled to simulate results from a 25 watt transmitter. A margin of 20% is added to the rated power output of 25 watts giving 30 watts and a 50% duty cycle is applied (ref KDB 447498v05).

NAME OF TEST: MPE ASSESSMENT

SPECIFICATION: FCC 47 CFR 1.1310

MEASUREMENT METHOD:
Field strength measurements were performed for two antenna positions on a representative vehicle (Holden Vectra 1997 four door sedan). See Appendix A for details of antenna and external test positions.
External Field strength readings were taken at 20 cm intervals vertically over a height of 2 metres.
Internal field strength readings were recorded in the front and back seat locations in the areas where the highest field strength was found.
Passenger exposure was evaluated at 10 cm from the surface of seats and back of head position in the rear seat. Measurements were made in an area 40cm wide representing the head and upper and lower torso.
Spatial averaging is carried out to determine the MPE result (IEEE C95.1 3.29).

MEASUREMENT RESULTS: See appendix A for antenna positions.

Calculations of average power (sum of results/number of results):

External to vehicle:

		Power Density (mW/cm^2)					
	Antenna pos.	Roof	Trunk	Trunk	Roof	Trunk	Trunk
	Test pos. (Appendix A)	A	B	C	A	B	C
	Antenna	2.15 dBi antenna			5.15 dBi antenna		
Test Height (m)	0.2	0.002	0.011	0.013	0.001	0.013	0.015
	0.4	0.003	0.010	0.017	0.002	0.011	0.017
	0.6	0.006	0.017	0.018	0.004	0.013	0.019
	0.8	0.022	0.037	0.042	0.015	0.028	0.039
	1.0	0.023	0.059	0.071	0.013	0.024	0.025
	1.2	0.027	0.074	0.101	0.012	0.014	0.022
	1.4	0.051	0.072	0.098	0.012	0.035	0.093
	1.6	0.074	0.055	0.074	0.009	0.080	0.185
	1.8	0.067	0.040	0.060	0.026	0.092	0.165
	2.0	0.044	0.031	0.044	0.068	0.082	0.101
	Average	0.032	0.040	0.054	0.016	0.039	0.068

Inside Vehicle:

Roof Mounted Antenna		
Internal Front Seat	Power Density (mW/cm^2)	
	2.15 dBi antenna	5.15 dBi antenna
Head	0.004	0.003
Upper torso	0.007	0.003
Lower torso	0.006	0.005
Average	0.006	0.004
Internal Back Seat	Power Density (mW/cm^2)	
	2.15 dBi antenna	5.15 dBi antenna
Head	0.004	0.003
Upper torso	0.011	0.004
Lower torso	0.013	0.009
Average	0.010	0.005

Trunk Mounted Antenna		
Internal Front Seat	Power Density (mW/cm^2)	
	2.15 dBi antenna	5.15 dBi antenna
Head	0.030	0.021
Upper torso	0.007	0.006
Lower torso	0.014	0.009
Average	0.017	0.012
Internal Rear Centre Seat	Power Density (mW/cm^2)	
	2.15 dBi antenna	5.15 dBi antenna
Head	0.038	0.014
Upper torso	0.165	0.054
Lower torso	0.120	0.051
Average	0.108	0.040

Measurement Uncertainty:

Field Probe: ± 1 dB

Test Equipment Used:

Equipment Type	Information	Manufacturer	Model No	Serial No#	Tait ID	Cal DueCal Due
Power Meter	Meter Unit	Rohde & Schwarz	NRVS 1020.1809.02	841954/005	E3555	15-Oct-14
Power Meter	Power Sensor	Rohde & Schwarz	URV5- Z4 395.1619. 55	841498/003	E3557	15-Oct-14
Power Supply		Rohde & Schwarz	NGS M32/10 192.0810.31	Fnr 434	E3556	19-Apr-14
RF Load	50W	Weinschel	F1426	AE2490	E3624	13-Oct-13
Field Strength Meter	10kHz 9.25GHz RF Field Probe	NARDA	EP601	401WX01247	E4856	21-Apr-16

Information to be placed in User/Installation manual:

§2.1033(c)(3) requires device operating and installation instructions to be submitted during equipment certification; instructions should include the minimum separation distance and other constraints required for the device and its antenna(s) to meet MPE limits.

Warning: RF Exposure Hazard
To comply with FCC RF exposure limits, mount the antenna at a location such that no person or persons can come closer than 35 inches (0.9m) to the antenna:
For radios with a transmit power >25W:
VHF radios must be installed using an antenna mounted centrally on the vehicle roof, with a gain of 2.15dBi or 5.15dBi.
UHF and 800 MHz radios must be installed using an antenna mounted either centrally on the vehicle roof with a gain of 2.15 dBi or 5.65 dBi, or centrally mounted on the trunk with a gain of 5.65 dBi.
For radios with a transmit power of 25W:
The radio must be installed using an externally mounted antenna with a gain of either 2.15 or 5.15 dBi.

Safety Training Information:

Radio frequency exposure information:

For your own safety and to ensure you comply with the United States Federal Communication Commission's (FCC) radio frequency (RF) exposure guidelines, and those from other administrations, please read the following information before using this radio.

Using this radio

You should use this radio only for work-related purposes (it is not authorized for any other use) and if you are fully aware of, and can exercise control over, your exposure to RF energy. To prevent exceeding RF exposure limits, you must control the amount and duration of RF that you and other people are exposed to.

It is also important that you:

- Do not remove the RF exposure label from the radio.
- Ensure this RF exposure information accompanies the radio when it is transferred to other users.
- Do not use the radio if you do not adhere to the guidelines on controlling your exposure to RF.

Controlling your exposure to RF energy

This radio emits radio frequency (RF) energy or radio waves primarily when calls are made. RF is a form of electromagnetic energy (as is sunlight), and there are recommended levels of maximum RF exposure.

To control your exposure to RF and comply with the maximum exposure limits for occupational/controlled environments, follow these guidelines:

- Do not talk (transmit) on the radio more than the rated transmit duty cycle. This is important because the radio radiates more energy when it is transmitting than when it is receiving.

Mobile radios only:

- While you are transmitting (talking or sending data) on the radio, you must ensure that there is always a distance of 35 inches (0.9 m) between people and the antenna. This is the minimum safe distance. For 110 W mobiles, the minimum safe distance is 44 inches (1.1 m).
- Use the radio only with Tait-approved antennas and attachments, and make only authorized modifications to the antenna otherwise you could damage the radio and violate FCC regulations.

Please refer to the following website for more information on what RF energy is and how to control your exposure to assure compliance with established RF exposure limits.

Website: http://www.fcc.gov/oet/rfsafety/rf-faqs.html

Appendix 1

Antenna Location and Test Positions:

Test Vehicle:
Holden Vectra 1997 four door sedan, dimensions 4.5m long, 1.7m wide and 1.4m high.

Each test position must satisfy the following requirements
(ref KDB643646 DR02 p13):
Criteria for bystanders:

- ≤90 cm from antenna.
- ≥20 cm from side of car.
- 15 cm multiple from antenna position.

Criteria for passengers:

- Passenger exposure must be evaluated at ≤10 cm from surface of seats.

Azimuth: Radials are referenced to 0 degrees, which is the bearing of the location with the shortest distance to the bystander.

External Measurement Positions:
Roof top Antenna Position:
Antenna mounted 70 cm from side of vehicle.

Bystander exposure:

Radial	Distance from antenna (including ≥20 cm clearance to side of car and rounded to 15 cm multiples)	Required distance from antenna	TEST REQUIRED
0 degrees	90 cm	≤90 cm	YES see A Fig 1
45 deg	120 cm	≤90 cm	NO (>90 cm)
90 deg	200 cm to front of car	≤90 cm	NO (>90 cm)
270 deg	220 cm to rear of car	≤90 cm	NO (>90 cm)
315 deg	120 cm	≤90 cm	NO (>90 cm)

Trunk mounted Antenna Position:
Antenna mounted 30 cm from rear of car on the centre of the trunk lid.

Bystander exposure:

Radial	Distance from antenna (including ≥20 cm clearance to side of car rounded to 15 cm multiples)	Required distance from antenna	TEST REQUIRED
0 degrees	60 cm to rear of car	≤90 cm	YES see C Fig 2
180 deg	470 cm to front of car	≤90 cm	NO (> 90 cm)
45 deg	75 cm to side of car	≤90 cm	YES see B Fig2
90 deg	105 cm to side of car	≤90 cm	NO (> 90 cm)

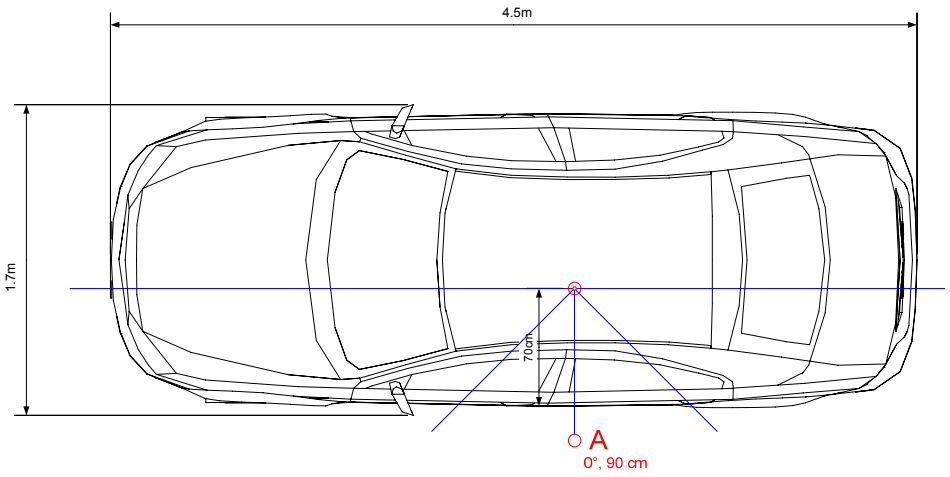

Figure 1

DATE Wednesday, 18 July 2012	TITLE MAX PERMISSIBLE EXPOSURE
SCALE 1:25	SUBJECT Roof Mount Antenna
DRAWN BY JENSENB	DESCRIPTION Teltest Laboratories Report 3521A

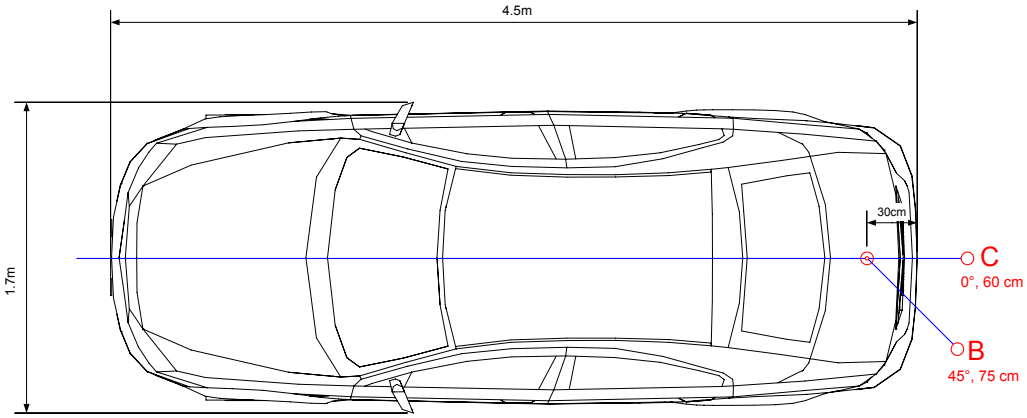

Figure 2

DATE Wednesday, 18 July 2012	TITLE MAX PERMISSIBLE EXPOSURE
SCALE 1:25	SUBJECT Trunk Mounted Antenna
DRAWN BY JENSENB	DESCRIPTION Teltest Laboratories Report 3521A