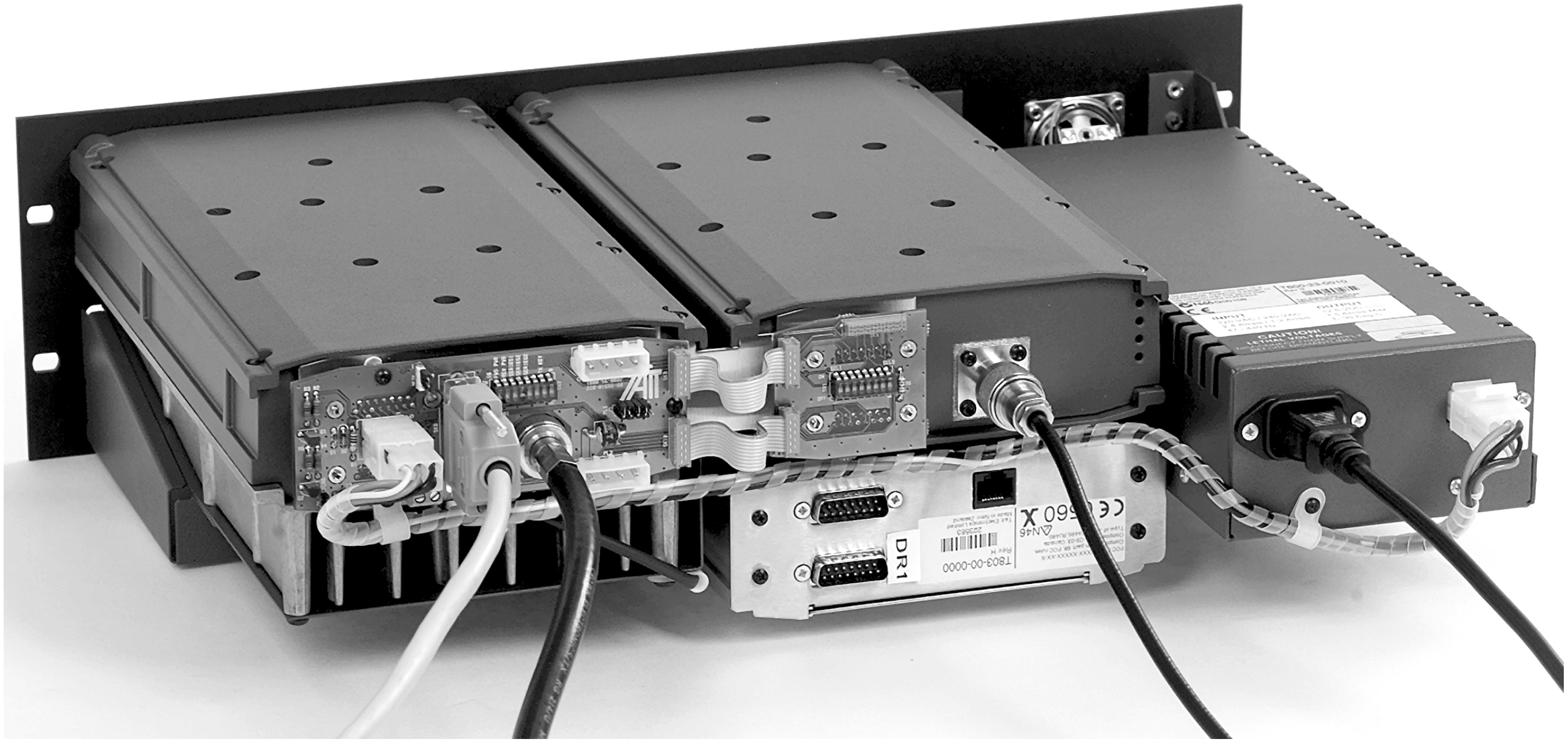


***T856/857 Installation***
***220-01138-00***
***Rear View***
***Cables Connetecd***
***Assembly with T803 fitted***


Copyright TEL

# 3 T858/859 Installation

## 3.1 Rack Mounting

**Caution:** **If you require continuous operation of the T858, leave the rack module position immediately adjacent to the finned heatsink empty. There should be adequate airflow over the fins at all times. Extra airflow can be provided by fitting an auxiliary fan kit such as the T800-19-0010 (refer to the T800 Ancillary Equipment Service Manual or your nearest Tait Dealer or Customer Service Organisation for more details).**

The T858 and T859 PAs are designed for use in a standard 483mm rack frame using Tait M800 SL2 guide rails. The guide rails are securely mounted to the rack frame with front and rear retaining screws, and the PA is secured into the guide with two (T858) or four (T859) front panel mounting screws. Figure 3.1 shows the standard, double width guide designed for use with the T859, while Figure 3.3 shows how the PA can be latched in the extended position. For more information on available guide kits, refer to the T800 Ancillary Equipment Service Manual or your nearest Tait Dealer or Customer Service Organisation.

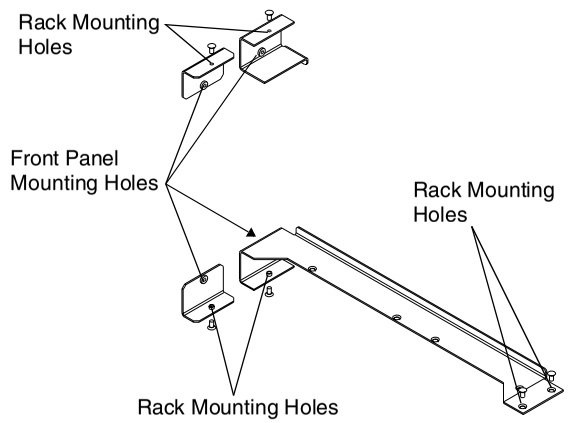


*Figure 3.1 T800-45-0001 PA Guide Kit*

The PA rear panel has three connectors: a BNC for RF input (from an adjacent T857 exciter), an N-type for RF output and a D-range for all DC, audio and control connections (refer to Figure 3.2).

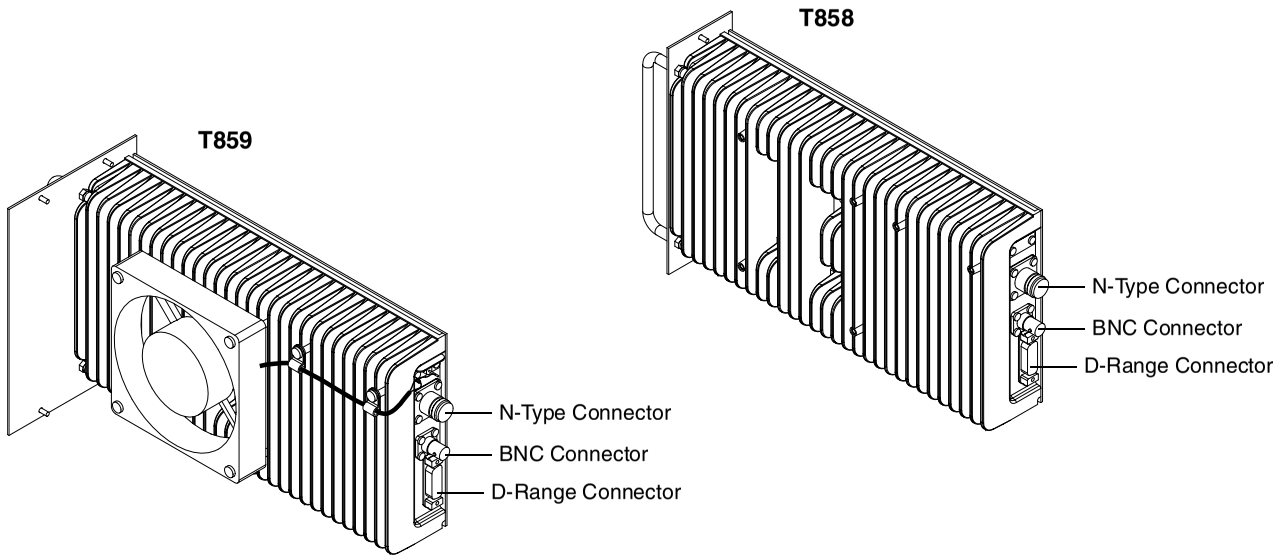


*Figure 3.2 T858/859 Chassis Connectors*

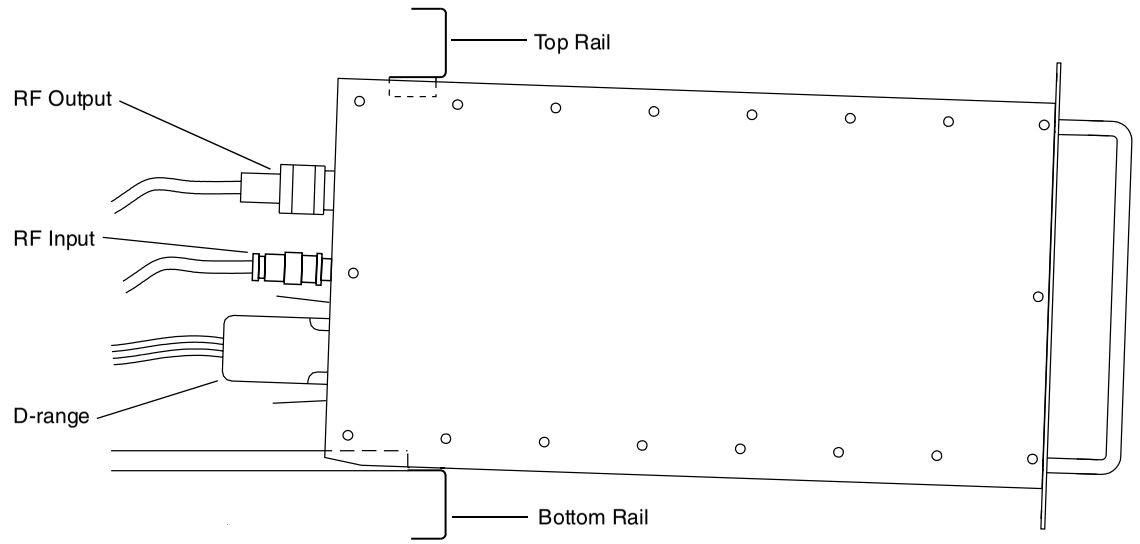


*Figure 3.3 T858/859 PA In Latched Position*

**Note:** You will need appropriate extension leads if you wish to carry out any adjustment procedures with the PA withdrawn from the rack in the latched position. Alternatively, disconnect and withdraw the PA and reconnect it behind the rack.

## 3.2 Rack Wiring

The D-range input and output connections are shown in Figure 3.4. Ensure that the cables are not subjected to any stresses due to tight bends or incorrect lengths.

Make sure the RF coax cables to the N-type and BNC connectors are free from sharp bends or twists. If access to the rear of the rack frame is restricted, the cables should be long enough to allow the chassis to be fully withdrawn from the guide.

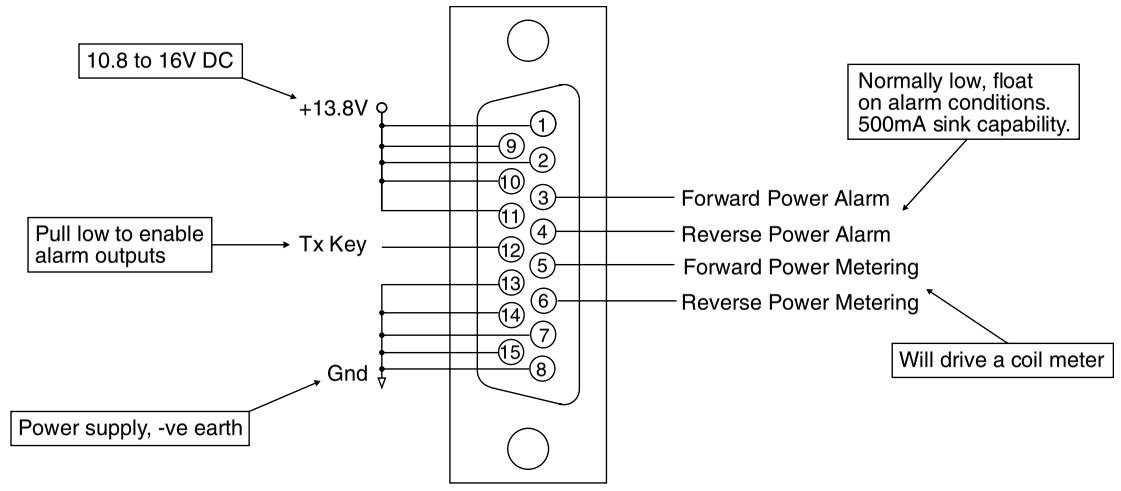


*Figure 3.4 T858/859 D-Range Wiring - Rear View*

## 3.3 Power Supply

If a power supply other than an appropriate Tait model is used, ensure that it is capable of providing enough current to drive the T800 system and is also free from excessive ripple or noise.

The system should be protected by the use of appropriately rated fuses in the power supply.

***Note:*** It is particularly important when the prime power source is a battery that fuses be employed in all supply lines.

***Caution:*** **Connect the power supply *directly* to the PA, and *not* via connector blocks. This will avoid overheating of connector blocks that are not of the correct current rating.**

## 3.4 Reverse Polarity & Overvoltage Protection

A crowbar diode is fitted to all T858/859 PAs for protection against connection to a power supply of incorrect polarity. It also provides overvoltage protection from voltage transients caused by lightning strikes.

***Note:*** A fuse must be fitted in the power supply line for the diode to provide effective protection.


Copyright TEL