KTL Test Report:	0R02734
Applicant:	Tait Electronics Ltd. 558 Wairakei Road Burnside Christchurch, New Zealand
Equipment Under Test: **(E.U.T.)**	T857-26-1010 Standard T857-26-1012 Externally Referenced
FCC ID:	CASTEL0049
In Accordance With:	**FCC Part 22** **FCC Part 90**
Tested By:	KTL Ottawa Inc. 3325 River Road, R.R. 5 Ottawa, Ontario K1V 1H2
Authorized By:	
	G. Westwell, Technologist
Date:	
Total Number of Pages:	26

Table of Contents

Section 1. Summary of Test Results **3**

Section 2. General Equipment Specification **5**

Section 3. RF Power Output **6**

Section 4. Occupied Bandwidth **7**

Section 5. Spurious Emissions at Antenna Terminals **12**

Section 6. Field Strength of Spurious Emissions **13**

Section 7. Frequency Stability **15**

Section 8. Transient Frequency Behaviour **16**

Section 9. Test Equipment List **21**

Annex A Test Diagrams **A1**

Section 1. Summary of Test Results

General

All measurements are traceable to national standards.

These tests were conducted on a sample of the equipment for the purpose of demonstrating compliance with FCC Part 22 and FCC Part 90.

☒	New Submission	☒	Production Unit
☐	Class II Permissive Change	☐	Pre-Production Unit

T	N	B	Equipment Code

THIS TEST REPORT RELATES ONLY TO THE ITEM(S) TESTED.

THE FOLLOWING DEVIATIONS FROM, ADDITIONS TO, OR EXCLUSIONS FROM THE TEST SPECIFICATIONS HAVE BEEN MADE.
See " Summary of Test Data".

NVLAP LAB CODE: 100351-0

TESTED BY: _____ DATE: _____
Russell Grant, Wireless Group Manager

KTL Ottawa Inc. authorizes the above named company to reproduce this report provided it is reproduced in its entirety and for use by the company's employees only.

Any use which a third party makes of this report, or any reliance on or decisions to be made based on it, are the responsibility of such third parties. KTL Ottawa Inc. accepts no responsibility for damages, if any, suffered by any third party as a result of decisions made or actions based on this report.

This report applies only to the items tested.

Summary Of Test Data

Name Of Test	Para. No.	Result
RF Power Output	2.1046	Complies
Audio Frequency Response	2.1047	Not Applicable
Audio Low-Pass Filter Response	2.1047	Not Applicable
Modulation Limiting	2.1047	Not Applicable
Occupied Bandwidth	2.1049	Complies
Spurious Emissions at Antenna Terminals	2.1051	Complies
Field Strength of Spurious Emissions	2.1053	Complies
Frequency Stability	2.1055	Complies
Transient Frequency Behavior	——	Complies

Footnotes For N/A's:

Test Conditions:

Indoor Temperature: 23 °C
Humidity: 50 %

Outdoor Temperature: 25 °C
Humidity: 65 %

.

Section 2. General Equipment Specification

Manufacturer:	Tait Electronics Ltd.
Model No.:	T857-26-1010 Standard T857-26-1012 Externally Referenced
Date Received In Laboratory:	July 24, 2000
KTL Identification No.:	Item #1 & 2
Transmitter:	120 VAC
Power:	50W
RF Output Power:	11K2F1D Wideband 6K0F1D Narrowband
Emission Designator:	Modulation: POCSAG 1200 bps Bn = 2M+2DK M=B/2 B = 1200 D = 5000 K = 1 Bn = 11200 Hz For D = 2700 Bn 6600 Hz

Section 3. RF Power Output

Para. No.: 2.1046

Test Performed By: Russell Grant	**Date of Test:** August 10, 2000

Minimum Standard: ± 1 dB

Test Results: Complies. The RF power output is within 0.7 dB of the manufacturer's rating.

Measurement Data:

Measured (W)	Rated (W)
58.9	50.0

Section 4. Occupied Bandwidth

Para. No.: 2.1049

Test Performed By: Russell Grant	**Date of Test:** August 10, 2000

Minimum Standard: Para. No.'s 90.210(c)
90.210(d)
22.359(b)(2)

Test Results: Complies.

Measurement Data: See attached graphs.

Modulated 1200 bps POCSAG4, 5 kHz Frequency Deviation 90.210(c) Mask

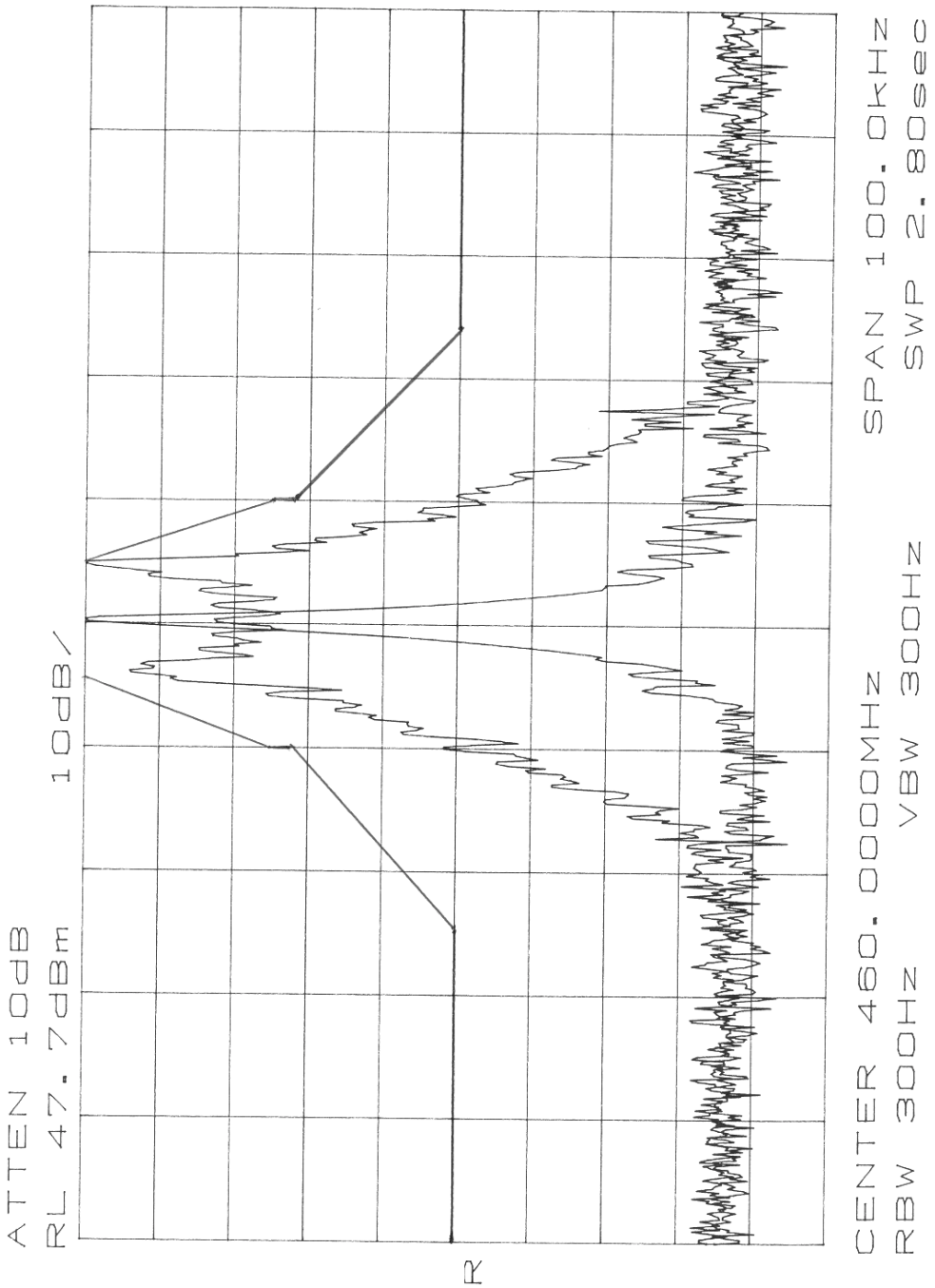

Modulated 1200 bps POCSAG4, 4.5 kHz Frequency Deviation 22.359(b)(2) Mask

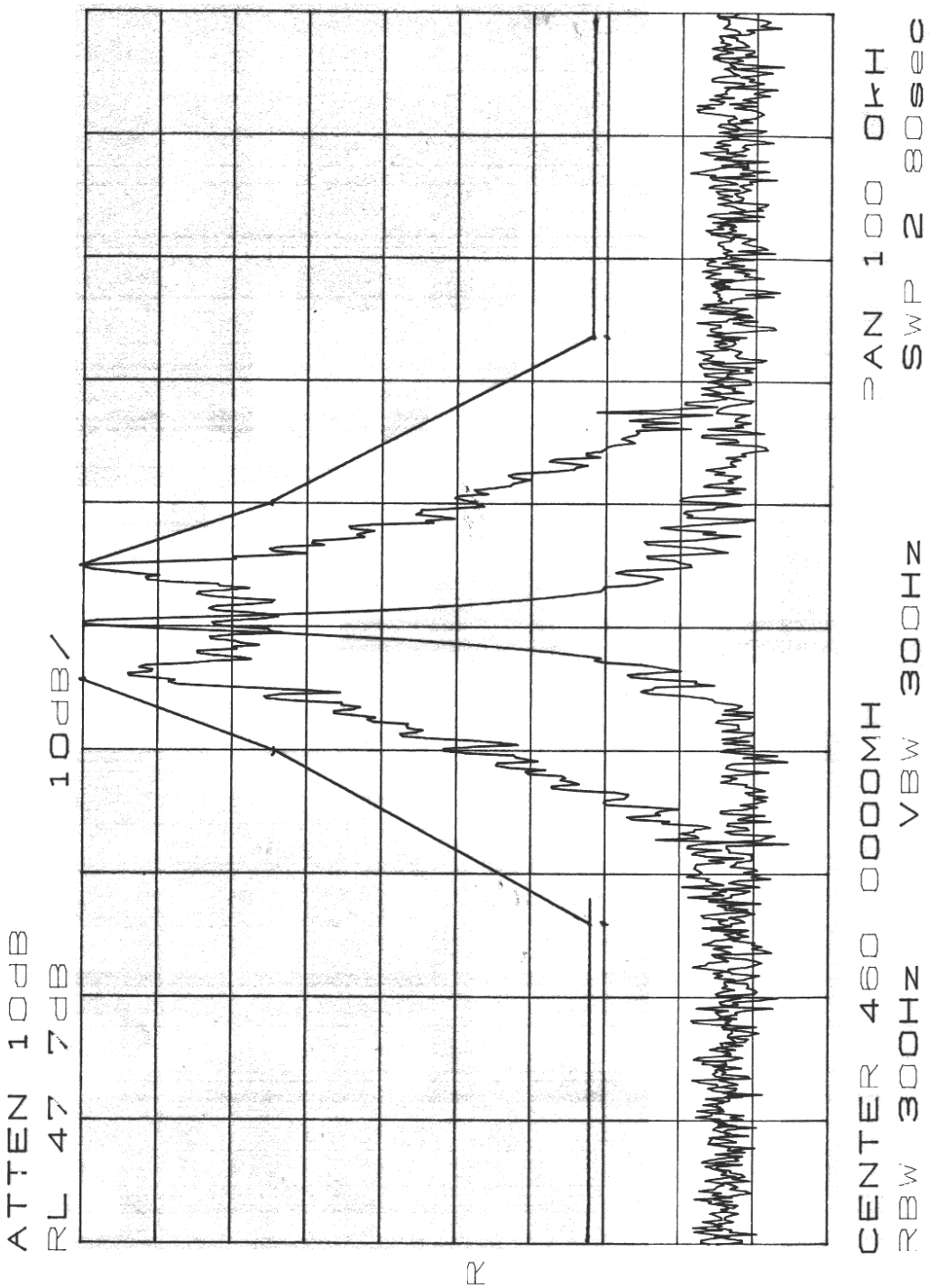

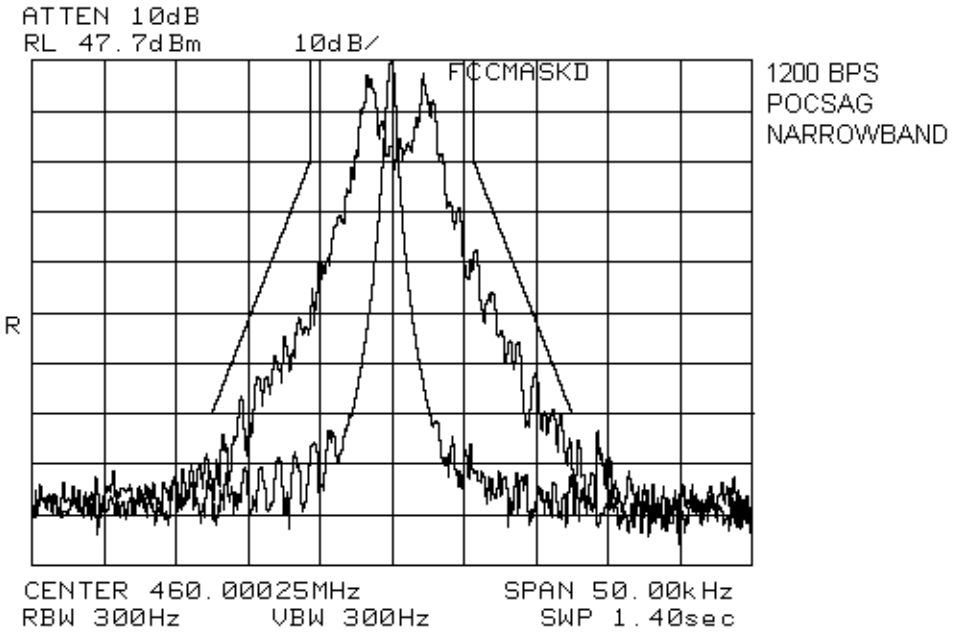
ATTEN 10dB
RL 47.7dBm
10dB/
FCCMASKD
1200 BPS
POCSAG
NARROWBAND
R
CENTER 460.00025MHz
SPAN 50.00kHz
RBW 300Hz
VBW 300Hz
SWP 1.40sec

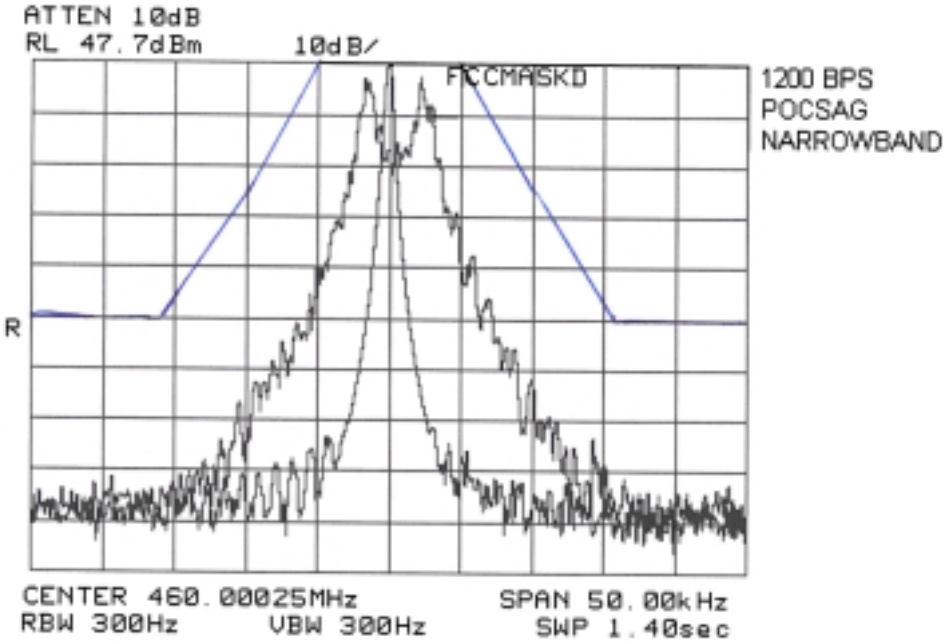
ATTEN 10dB
RL 47.7dBm
10dB/
FCCMASKD
1200 BPS
POCSAG
NARROWBAND
R
CENTER 460.00025MHz
RBW 300Hz
VBW 300Hz
SPAN 50.00kHz
SWP 1.40sec

Section 5. Spurious Emissions at Antenna Terminals

Para. No.: 2.1051

Test Performed By: Russell Grant	**Date of Test:** August 10, 2000

Minimum Standard: Para. No.'s 90.210 (c)(d)
22.359 (b)(2)

Test Results: Complies.

No emissions were detected within 20dB of the specification limit.

Measurement Data: See attached graphs.

Section 6. Field Strength of Spurious Emissions

Para. No.: 2.1053

Test Performed By: Russell Grant	**Date of Test:** August 10, 2000

Minimum Standard: Para. No.'s 90.210 (c), (d)
22.359 (b)(2)

Test Results: Complies. The worst case emission is 66.5 dBµV/m @ 3m at 3680 MHz. This is 8.7 dB below the specification limit.

Measurement Data: See attached tables.

Test Data - Radiated Emissions

Test Distance (meters) : 3		Range: A Tower		Receiver: ESVP		RBW(kHz): 1 MHz		Detector: Peak	
Freq. (MHz)	Ant. *	Pol. (V/H)	RCVD Signal (dBμV/m)	Ant. Factor (dB)**	Amp. Gain (dB)***	Dist. Corr. (dB)	Field Strength (dBμV/m)	Limit (dBμV/m)	Margin (dB)
EXTERNAL									
920.0	L/P	V	15.1	30.3			45.4	77.4	32.0
920.0	L/P	H	16.2	30.3			46.5	77.4	30.9
1380.0	Hrn2	V	67.3	30.5	-48.0		49.8	75.2	25.4
1380.0	Hrn2	H	68.7	30.5	-48.0		51.2	75.2	24.0
1840.0	Hrn2	V	73.6	33.3	-48.1		58.8	75.2	16.4
1840.0	Hrn2	H	73.0	33.3	-48.1		58.2	75.2	17.0
2300.0	Hrn2	V	70.3	36.2	-59.2		47.3	75.2	27.9
2300.0	Hrn2	H	72.8	36.2	-59.2		49.8	75.2	25.4
2760.0	Hrn2	V	80.3	38.1	-59.9		58.5	75.2	16.7
2760.0	Hrn2	H	80.6	38.1	-59.9		58.8	75.2	16.4
3220.0	Hrn2	V	78.8	39.7	-59.4		59.1	75.2	16.1
3220.0	Hrn2	H	78.5	39.7	-59.4		58.8	75.2	16.4
3680.0	Hrn2	V	80.3	41.6	-57.6		64.3	75.2	10.9
3680.0	Hrn2	H	82.5	41.6	-57.6		66.5	75.2	8.7
4140.0	Hrn2	V	64.0	43.0	-54.6		52.4	75.2	22.8
4140.0	Hrn2	H	65.1	43.0	-54.6		53.5	75.2	21.7
4600.0	Hrn2	V	59.5	43.9	-55.6		47.8	75.2	27.4
4600.0	Hrn2	H	60.0	43.9	-55.6		48.3	75.2	26.9
STANDARD									
3680.0	Hrn2	V	77.5	41.6	-57.6		61.5	75.2	13.7
3680.0	Hrn2	H	81.8	41.6	-57.6		65.8	75.2	9.4
3220.0	Hrn2	V	78.7	39.7	-59.4		59.0	75.2	16.2
3220.0	Hrn2	H	78.8	39.7	-59.4		59.1	75.2	16.1

Notes:
B/C = Biconical, B/L = Biconilog, L/P = Log-Periodic, H = Horn, D/P = Dipole
* Re-measured using dipole antenna.
** Includes cable loss when amplifier is not used.
*** Includes cable loss.
( ) Denotes failing emission level.
N.D. = Not Detected

Section 7. Frequency Stability

Para. No.: 2.1055

Test Performed By: Russell Grant	**Date of Test:** August 10, 2000

Minimum Standard: Para. No.'s 22.355
90.213

Test Results: Complies. The maximum frequency drift is 375 Hz.
This is 0.815 ppm and 4 Hz, 0.00870 ppm external.

Measurement Data: Standard Test Voltage (STV): 120 VAC
Test Frequency: 460.000 MHz

Test Condition	Frequency (MHz)	Frequency Drift (Hz)
-30	460.000 375	375
-20	460.000 270	270
-10	460.000 238	238
0	460.000 108	108
+10	460.000 027	027
+20	460.000 041	041
+30	460.000 047	047
+40	460.000 126	126
+50	460.000 163	163

There was no change in the frequency due to ± 15% variation of standard test voltage.

The maximum frequency drift using external reference is 4 Hz.

Section 8. Transient Frequency Behaviour

Test Performed By: Russell Grant	**Date of Test:** August 10, 2000

Minimum Standard: Para. No. 90.214

Test Results: Complies.

Measurement Data: See attached graphs.

Wideband ± 25 kHz

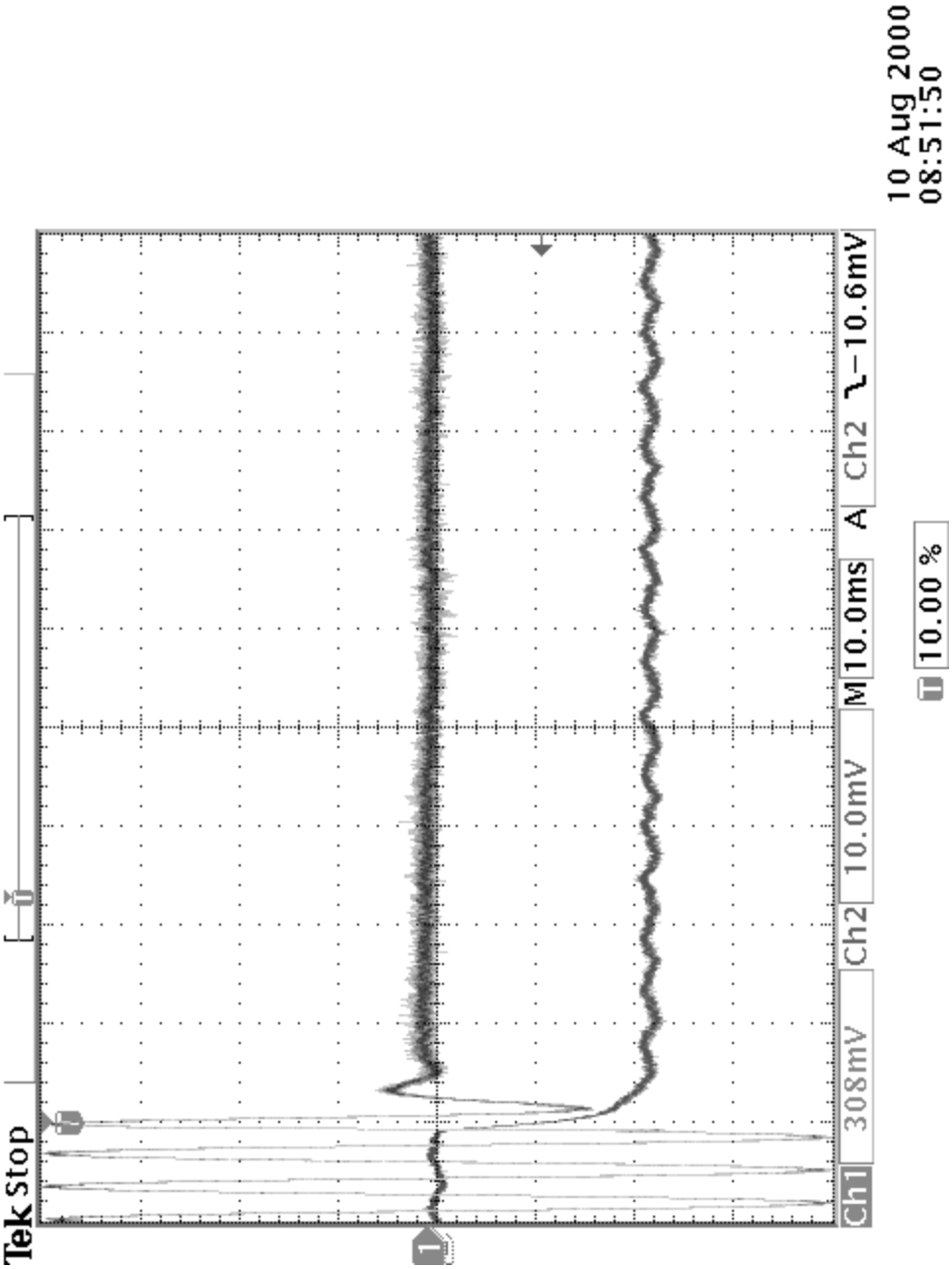

Wideband ± 25 kHz

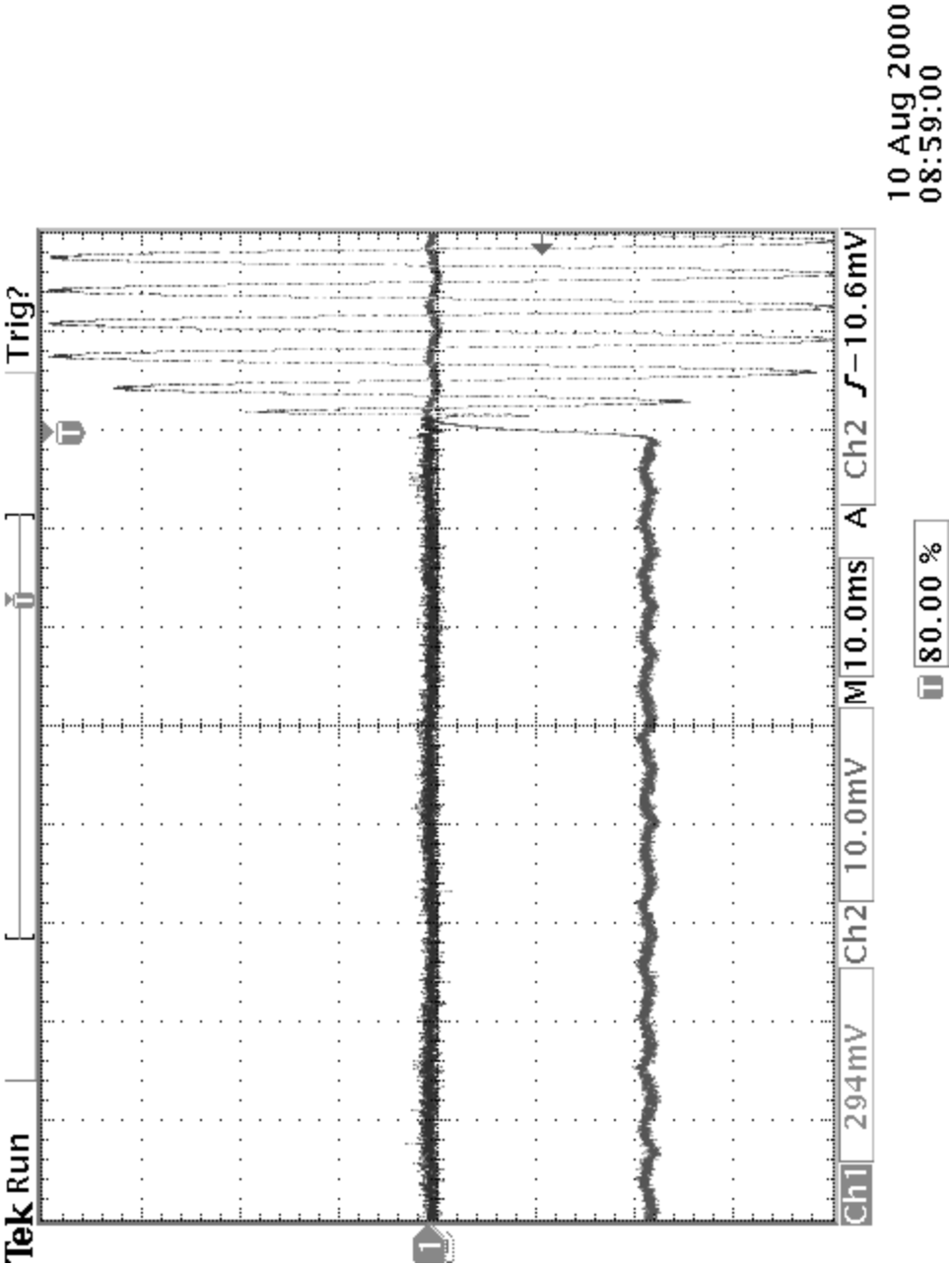

Narrowband ± 12.5 kHz

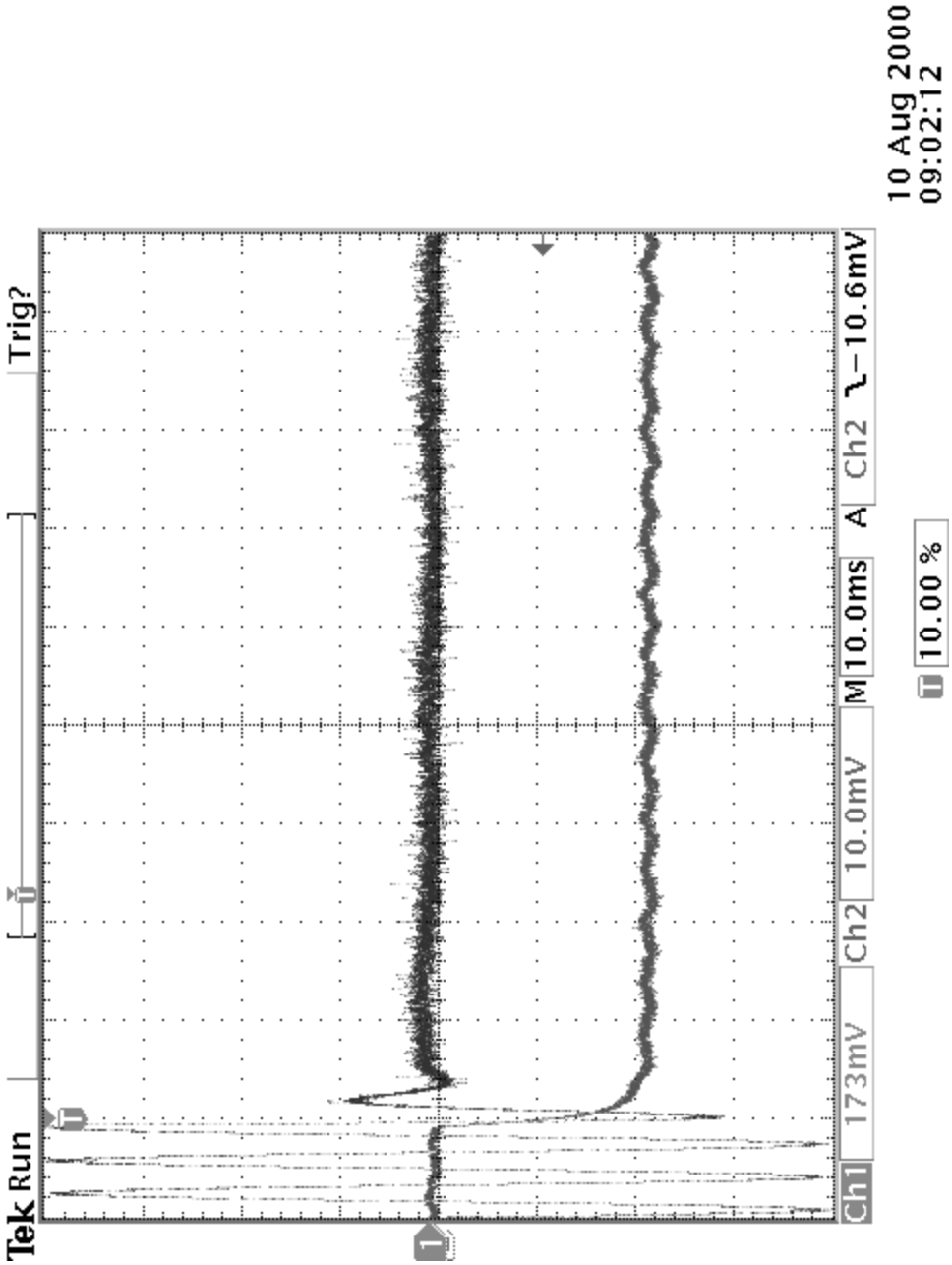

Narrowband ± 12.5 kHz

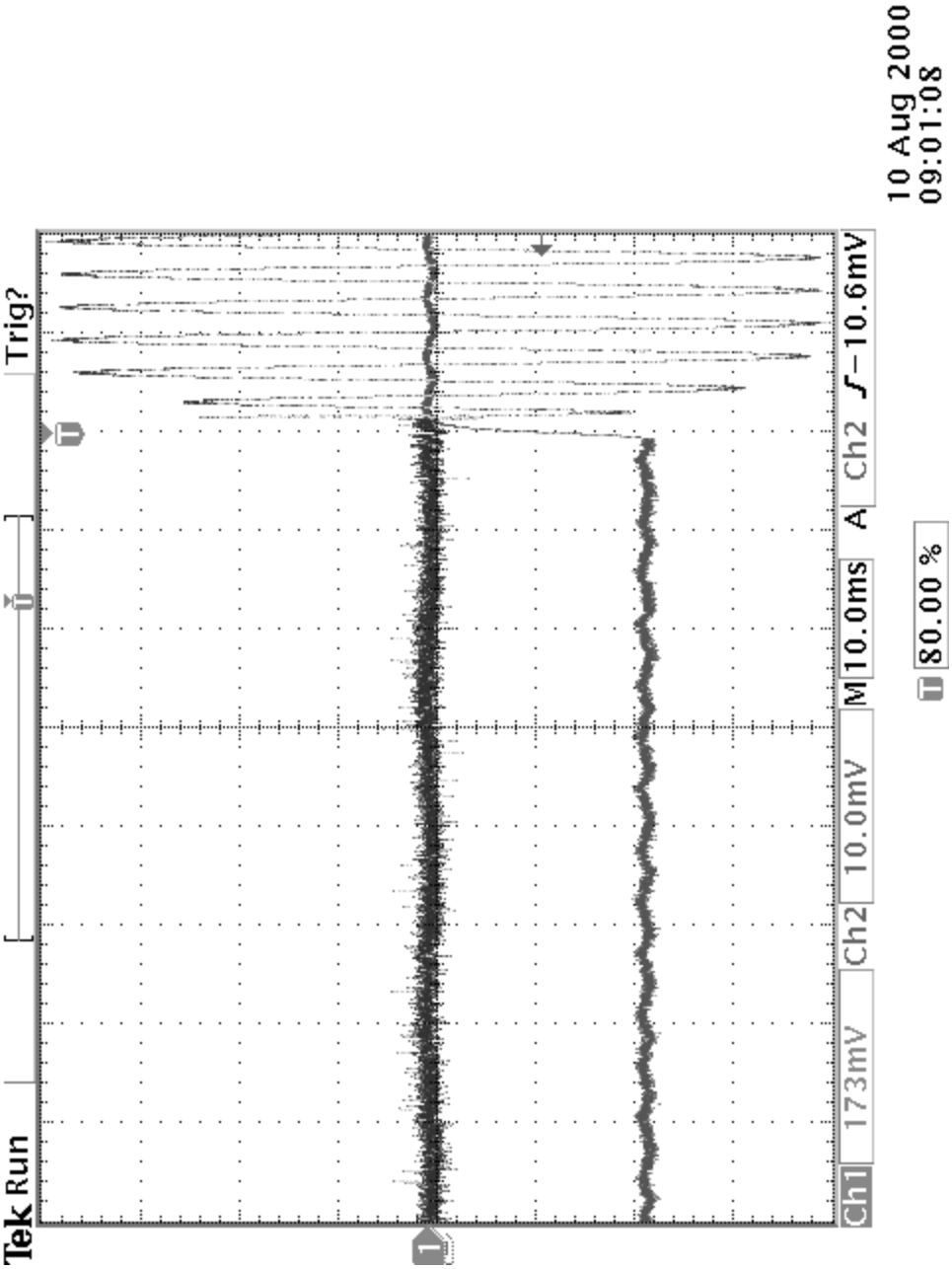

Section 9. Test Equipment List

CAL CYCLE	EQUIPMENT	MANUFACTURER	MODEL	SERIAL	LAST CAL.	NEXT CAL.
1 Year	Spectrum Analyzer	Hewlett Packard	8565E	FA000981	June 16/00	June 16/01
1 Year	Climate Chamber	Thermotron	SM-16C	15649-S	COU	COU
1 Year	Attenuator	Narda	768-10	9709	Oct. 8/99	Oct. 8/00
1 Year	Attenuator	Narda	769-20	4153	Oct. 1/99	Oct. 1/00
1 Year	Attenuator	Narda	776B-20	FA001400	Oct. 15/99	Oct. 15/00
2 Year	Insertion Unit	Rohde & Schwarz	URV5-Z4	FA000905	Oct. 6/99	Oct. 6/01
2 Year	Power Sensor	Rohde & Schwarz	URV5-Z5	FA000419	Oct. 6/99	Oct. 6/01
1 Year	Horn Antenna	EMCO #2	3115	4336	Nov. 11/99	Nov. 11/00
1 Year	Dipole Antenna Set	EMCO #2	3121C	FA001349	June 27/00	June 27/01
1Year	Frequency Counter	Hewlett Packard	HP5350A	2444A00135	May 7/00	Nov. 7/00

NA: Not Applicable
NCR: No Cal Required
COU: CAL On Use

Annex A

Test Diagrams

Para. No. 2.1046 - R.F. Power Output

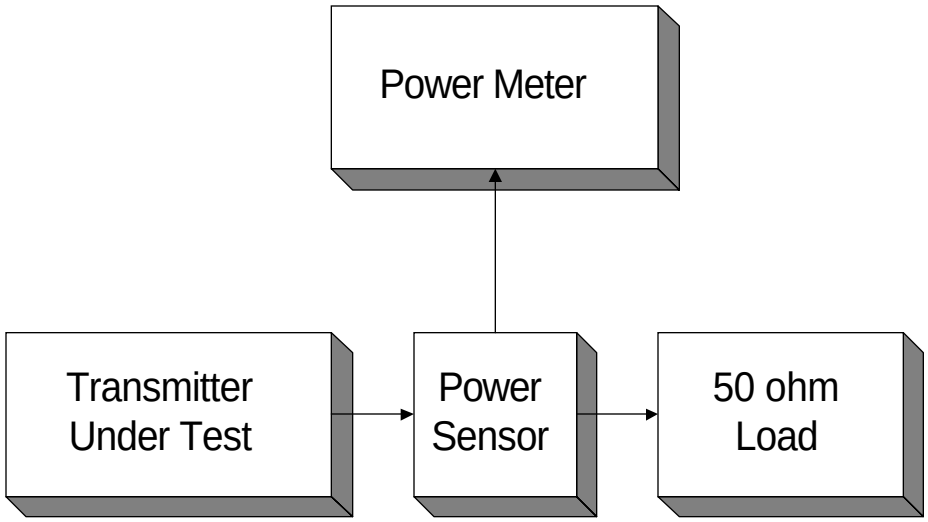

Para. No. 2.1047 - Audio Frequency Response

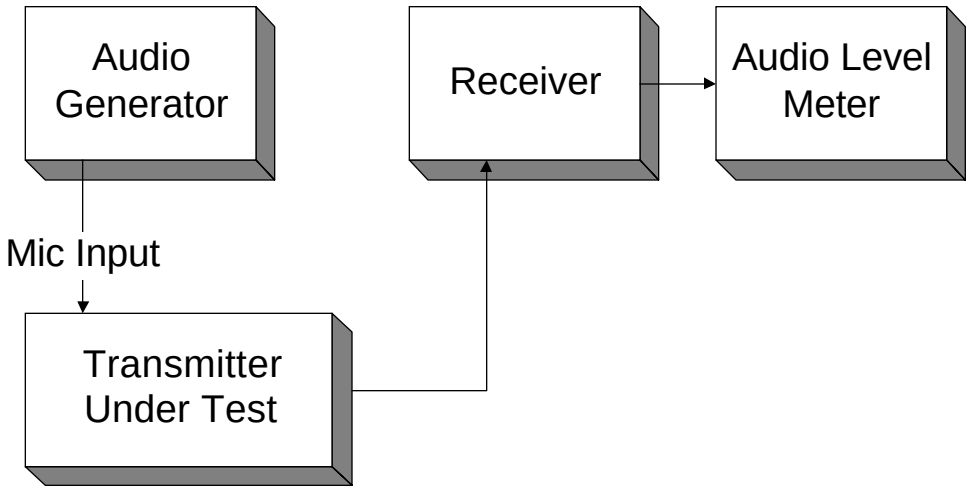

Para. No. 2.1047 - Modulation Limiting

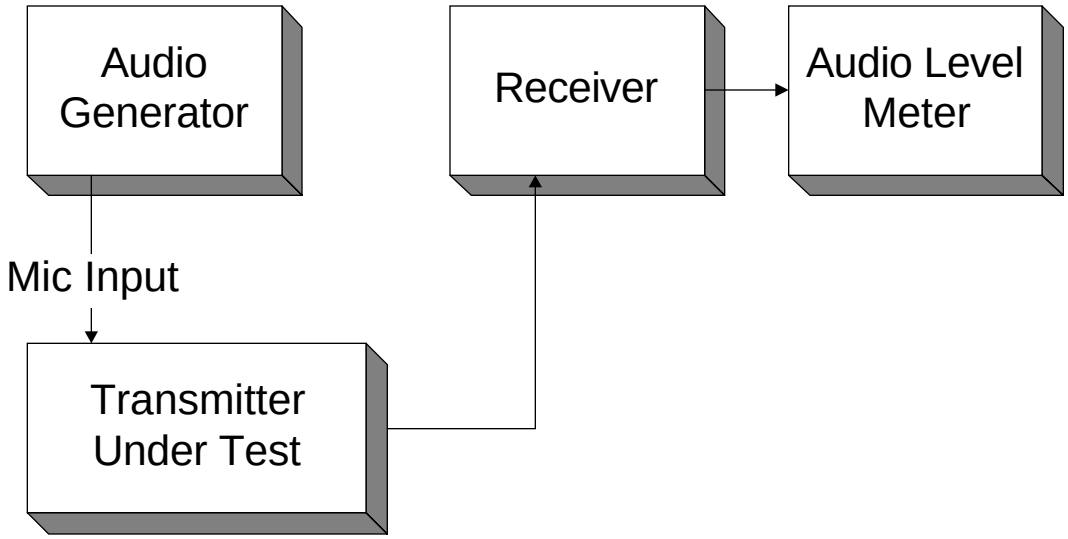

Para. No. 2.1049 - Occupied Bandwidth

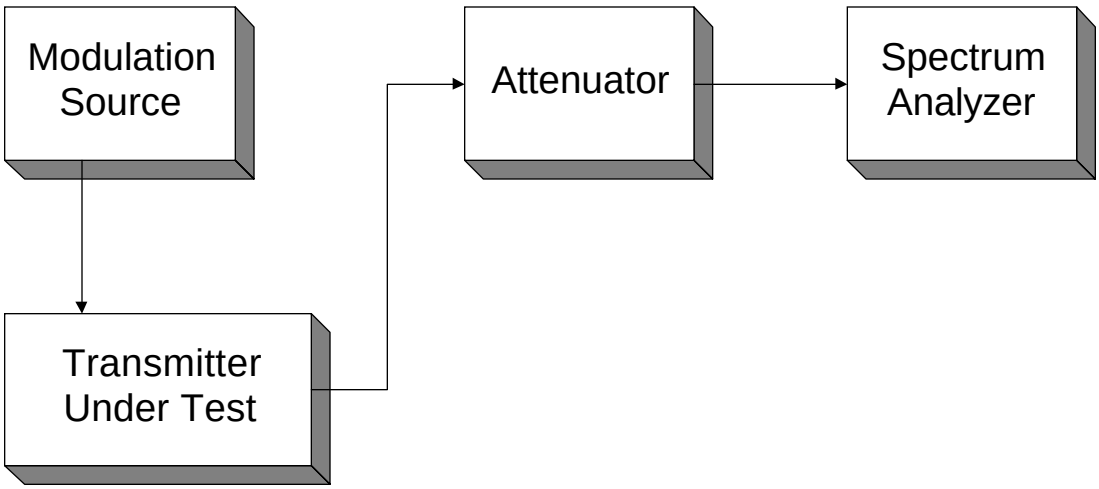

Para. No. 2.1051 - Spurious Emissions at Antenna Terminals

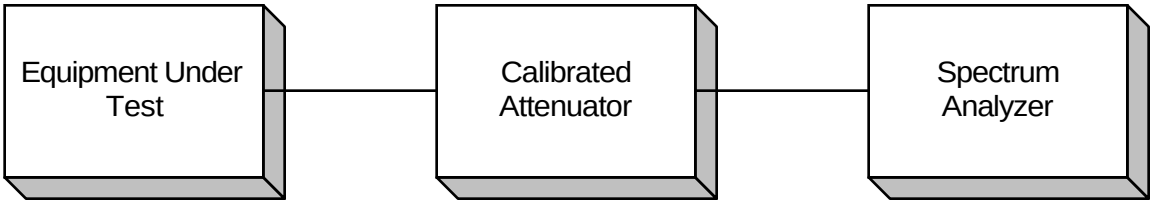

Para. No. 2.1053 - Field Strength of Spurious Radiation

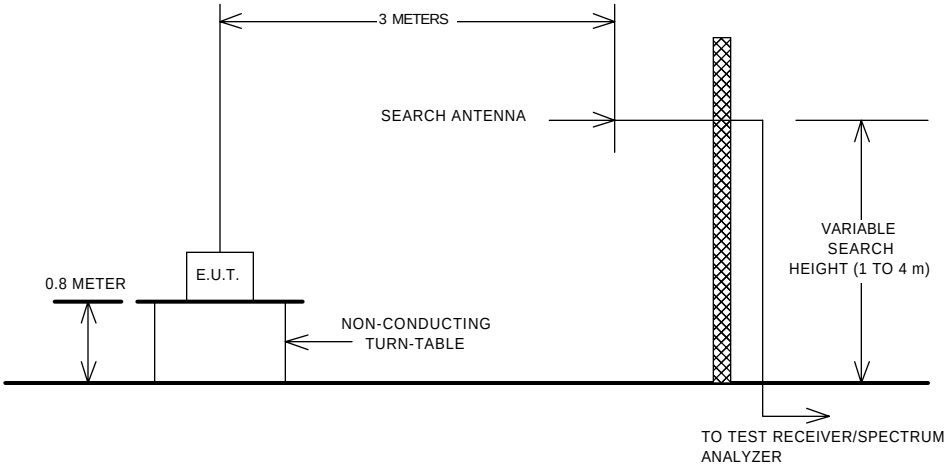

Para. No. 2.1055 - Frequency Stability

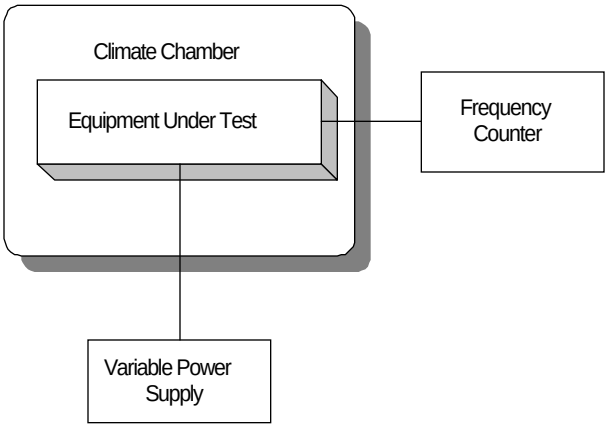

Para. No. 90.214 - Transient Frequency Behaviour

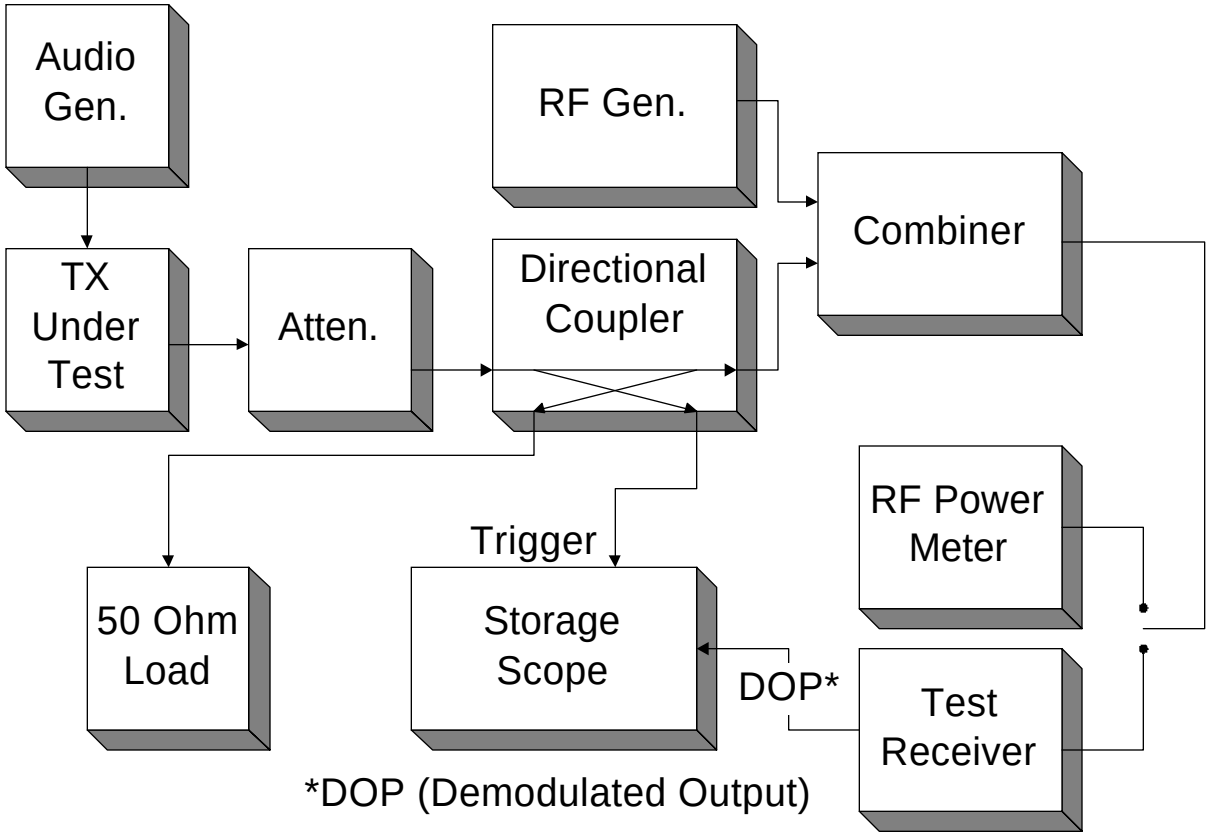

Voice
This measurement was made using measurement procedure TIA/EIA Land Mobile FM or PM Communications Equipment Measurement and Performance Standards TIA/EIA-603 February 1993 Telecommunications Industry Association (American National Standard ANSI/TIA/EIA-603-1992 Approved: October 27, 1992) Para. no. 2.2 Methods of Measurement for Transmitters Para. no. 2.2.19 Transient Frequency Behaviour (page no. 83).

Data
This measurement was made using measurement procedure TIA/EIA Digital C4FM/CQPSK Transceiver Measurement Methods TSB102.CAAA Para. no. 2.2.17 Transient Frequency Behaviour (page no. 74).