WIRING DIAGRAM
(SCHEMATICS)

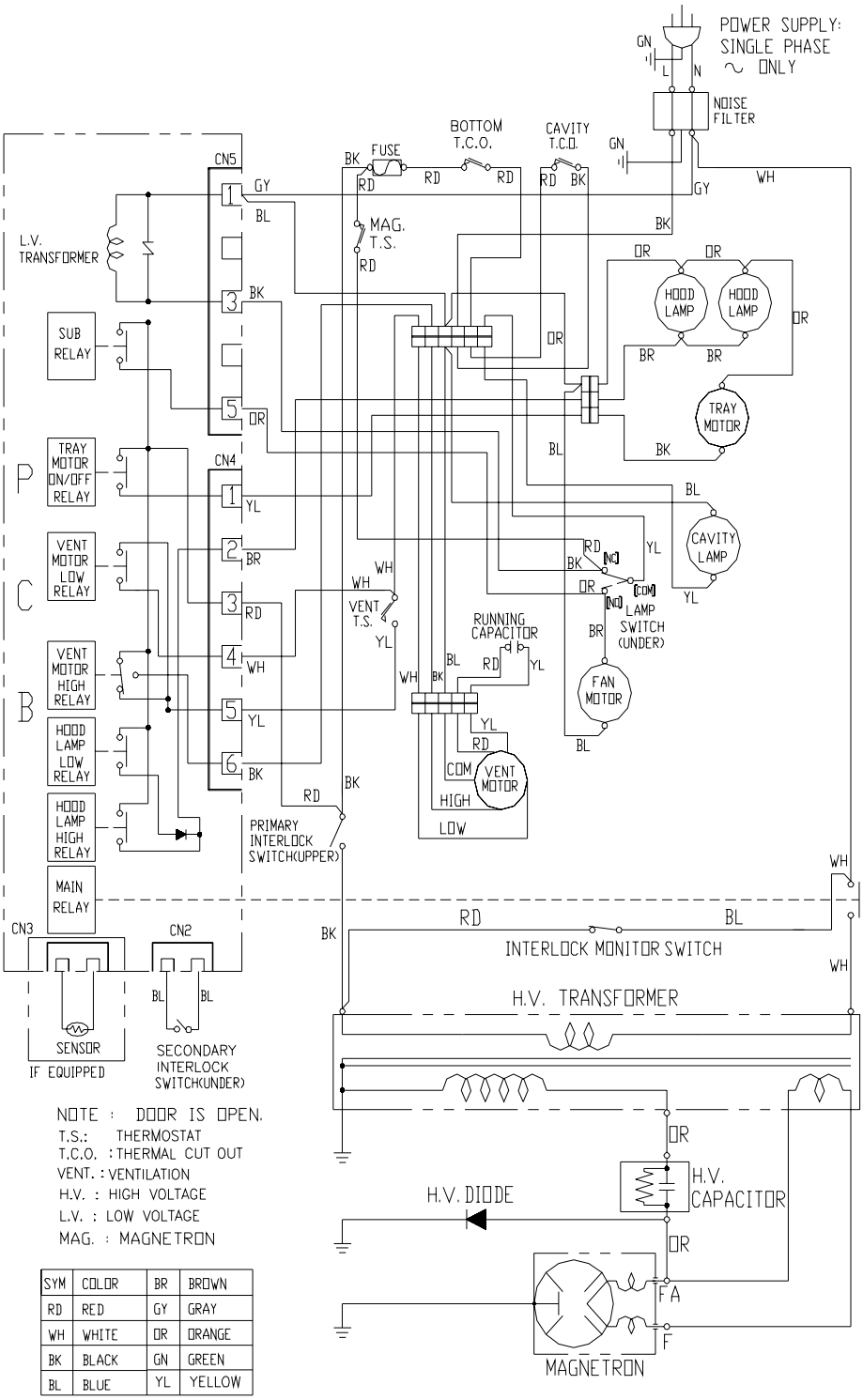

NOTE : DOOR IS OPEN.
T.S.: THERMOSTAT
T.C.O. : THERMAL CUT OUT
VENT. : VENTILATION
H.V. : HIGH VOLTAGE
L.V. : LOW VOLTAGE
MAG. : MAGNETRON

SYM	COLOR	BR	BROWN
RD	RED	GY	GRAY
WH	WHITE	OR	ORANGE
BK	BLACK	GN	GREEN
BL	BLUE	YL	YELLOW

FCC ID: C5F7NF17MO1ØØN