50-21553

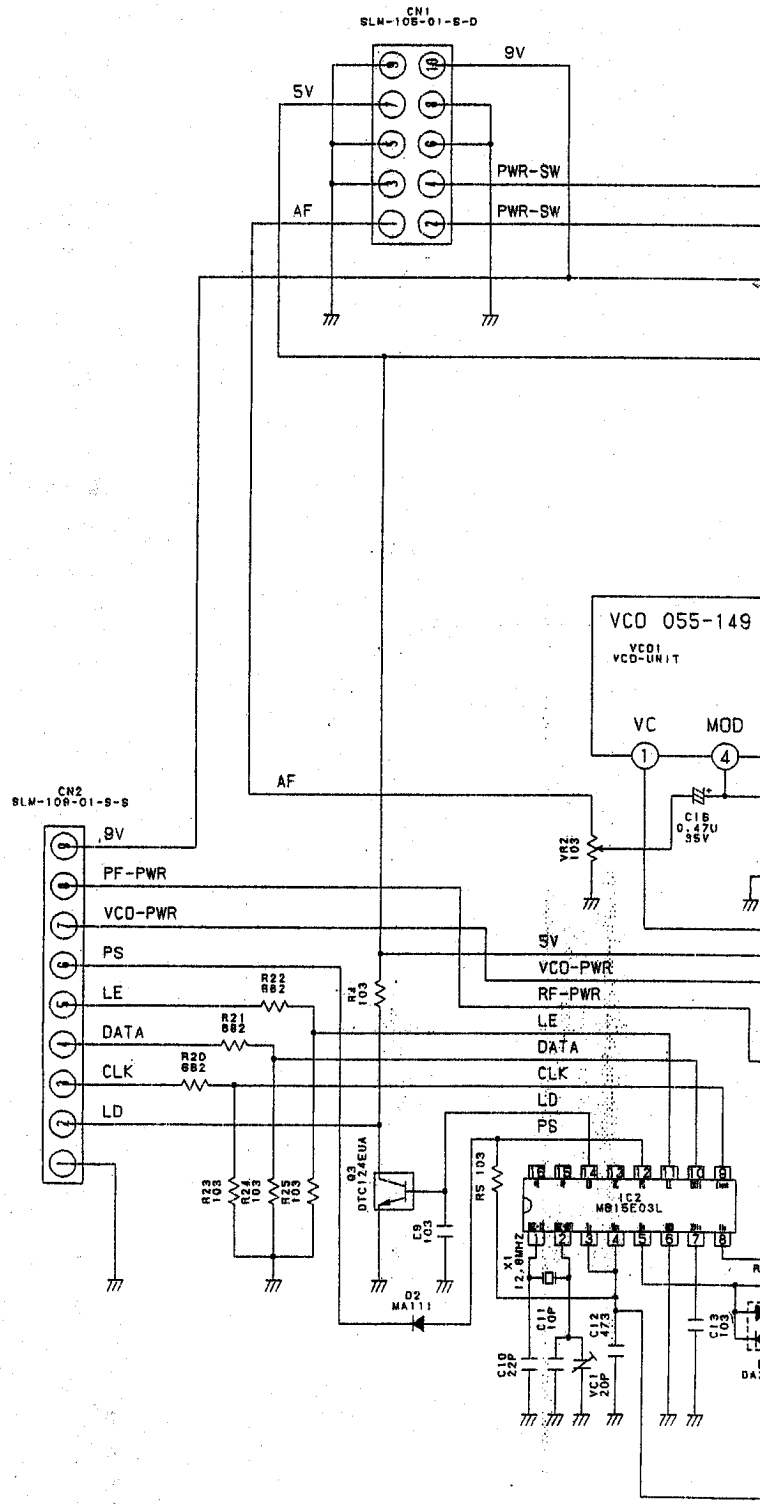
CN1
SLM-105-01-S-D
9V
5V
PWR-SW
PWR-SW
AF
VCO 055-149
VCO1
VCO-UNIT
VC
MOD
C16
0.47U
35V
VR2
103
AF
CN2
SLM-108-01-S-S
9V
PF-PWR
VCO-PWR
PS
LE
DATA
CLK
LD
R22
682
R21
682
R20
682
R14
103
5V
VCO-PWR
RF-PWR
LE
DATA
CLK
LD
PS
R23
103
R24
103
R25
103
Q3
DTC124EUA
C9
103
D2
MA111
R5 103
IC2
M61SE03L
X1
12.8MHZ
C11
10P
C12
473
C10
22P
VC1
20P
C13
103