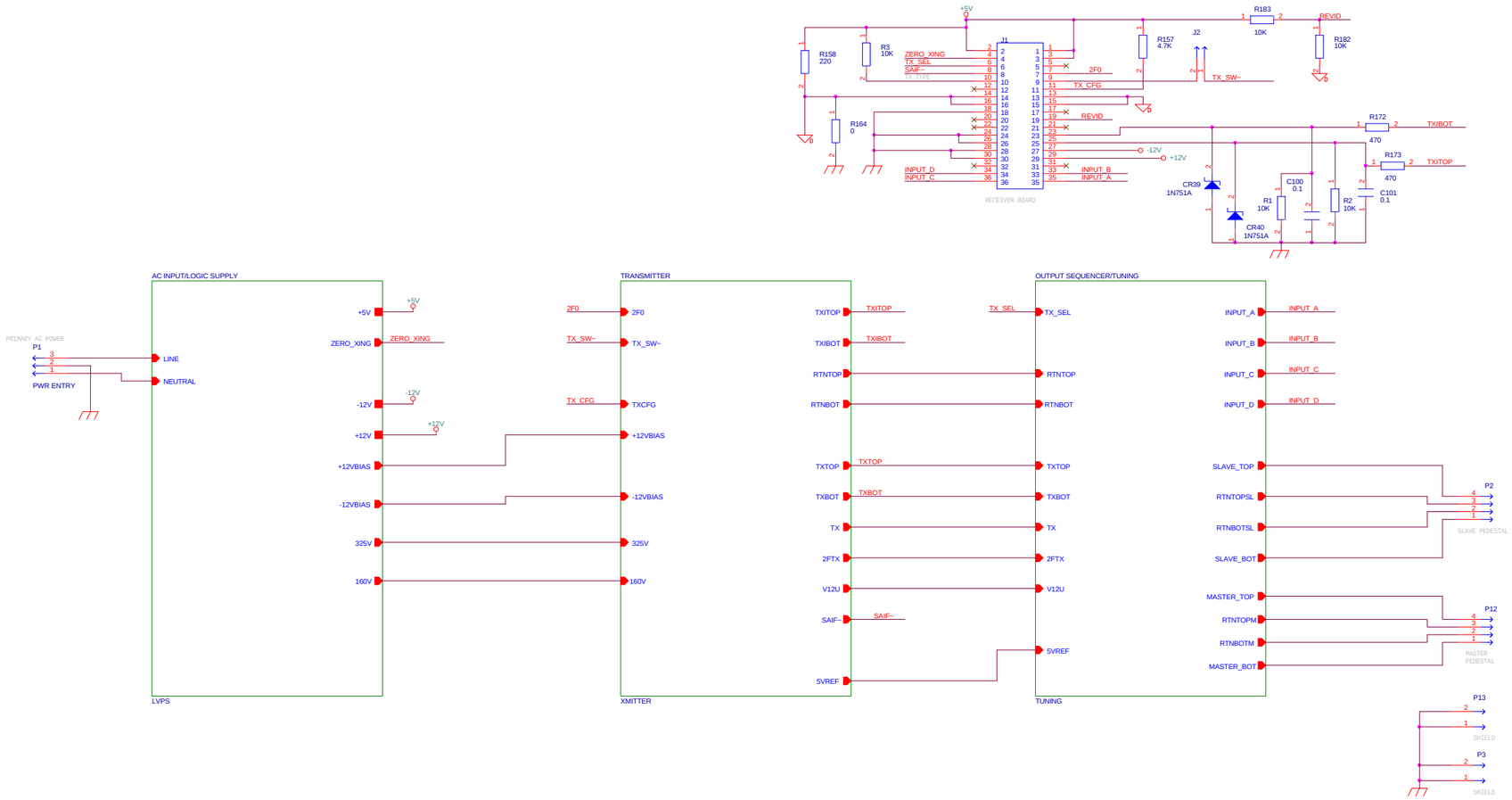

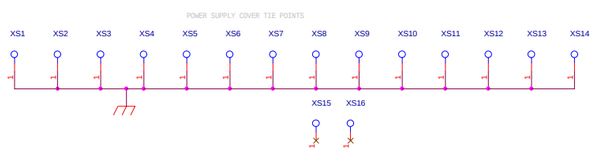

HIGHEST REF DES.				USED
U13	R183	C183	Q48	U13
U7	P13			

REF DES.	NOT USED		

NOTES:
1. UNLESS OTHERWISE SPECIFIED :
RESISTOR VALUES ARE IN OHMS
± 5%. RESISTOR POWER RATINGS
ARE 1/4W. CAPACITOR VALUES
ARE IN MICRO FARADS , 50V.

LTR	ECN NO.	DESCRIPT	D ATE	BY	APPD'
A	99957-4	REL PER EB	03/24/99		

APPROVALS	DATE
DRAWN Jim Arguello	03/24/99
CHECKED	
ENGR Steve Embling	
APP'D	
RELEASE	

Sensormatic Electronics Corp.
951 YAMATO Rd.
BOCA RATON, FL 33431

Title: SCHEMATIC, U'P,XMTR/PWR SUPPLY,NON-EUROPEAN

Size: Custom | Document Number: S0301-0791-02 | Rev: A

Date: Wednesday, March 24, 1999 | Sheet 1 of 4