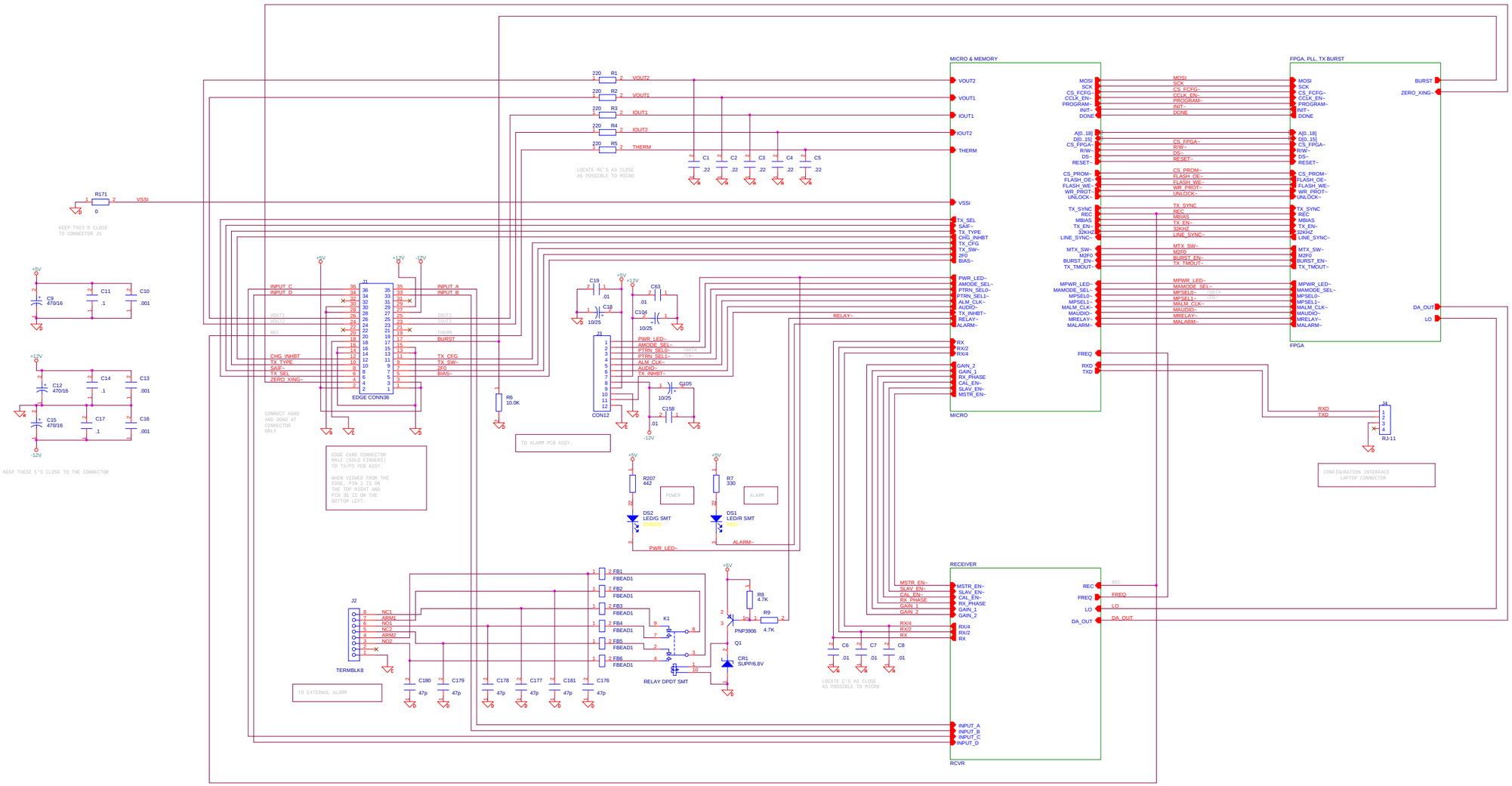

C	186	
CR	18	
DS	7	
FB	6	
J	9	
JW	1	
K	1	
L	2	
Q	1	
R	217	
RN	10	
TP	42	
TPQ	22	3
U	37	
Y	1	
DES	LAST USED	NOT USED

NOTES:
1. UNLESS OTHERWISE SPECIFIED : RESISTOR VALUES ARE IN OHMS ± 5%. RESISTOR POWER RATINGS ARE 1/4W. CAPACITOR VALUES ARE IN MICRO FARADS , 50V.

2. ONLY ONE OF THE POWER ON RESET DEVICES CAN BE USED (U36 OR U37). U37 IS AN ALTERNATE FOOTPRINT. ONLY STUFF THE APPROPRIATE CAPACITOR.

LTR	ECN NO.	DESCRIPT	DATE	BY	APPD'
B	970258	REL PER PCN	3-28-97	DF	
A	969114-3	REL PER ER	11-1-96	DF	

APPROVALS	DATE
DRAWN D. FALLIN	5/8/96
CHECKED D. FALLIN	6/29/96
ENGR D. DRAVD, FALLIN	6/29/96
APP'D	
RELEASE	

Automatic Electronics Corporation
[illegible] Yamato Road
Boca Raton, Florida 33431

SCHEMATIC, ULTRA*POST RECEIVER/CONTROLLER

Document Number S0301-0785-01 Rev B

Date: Wednesday, April 14, 1999 Sheet 1 of 4