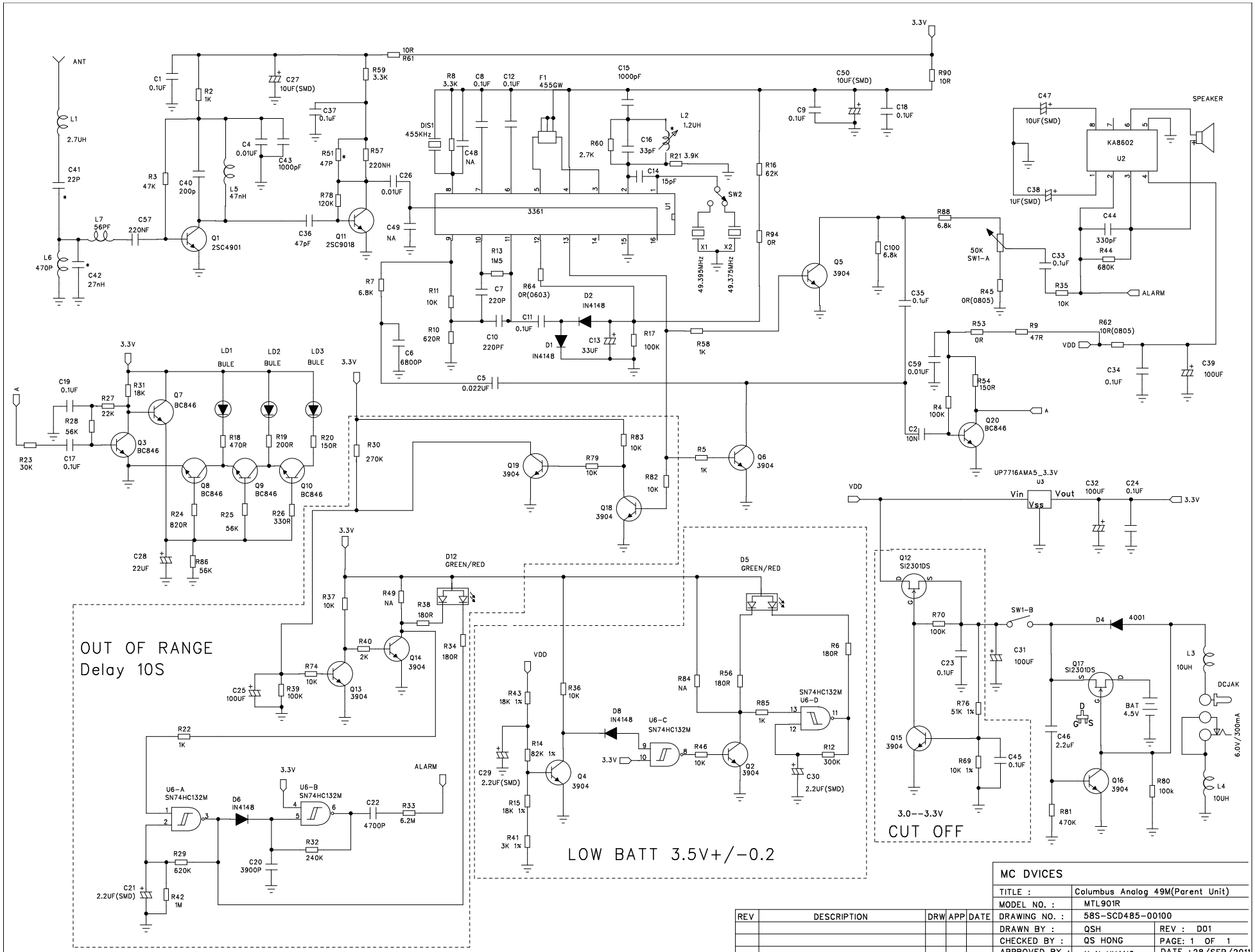

REV	DESCRIPTION	DRW	APP	DATE

MC DVICES		
TITLE :	Columbus Analog 49M(Parent Unit)	
MODEL NO. :	MTL901R	
DRAWING NO. :	58S-SCD485-00100	
DRAWN BY :	QSH	REV : D01
CHECKED BY :	QS HONG	PAGE: 1 OF 1
APPROVED BY :	X N HUANG	DATE :28/SEP/2011