PDF 文件使用 "pdfFactory Pro" 试用版本创建 www.fineprint.com.cn

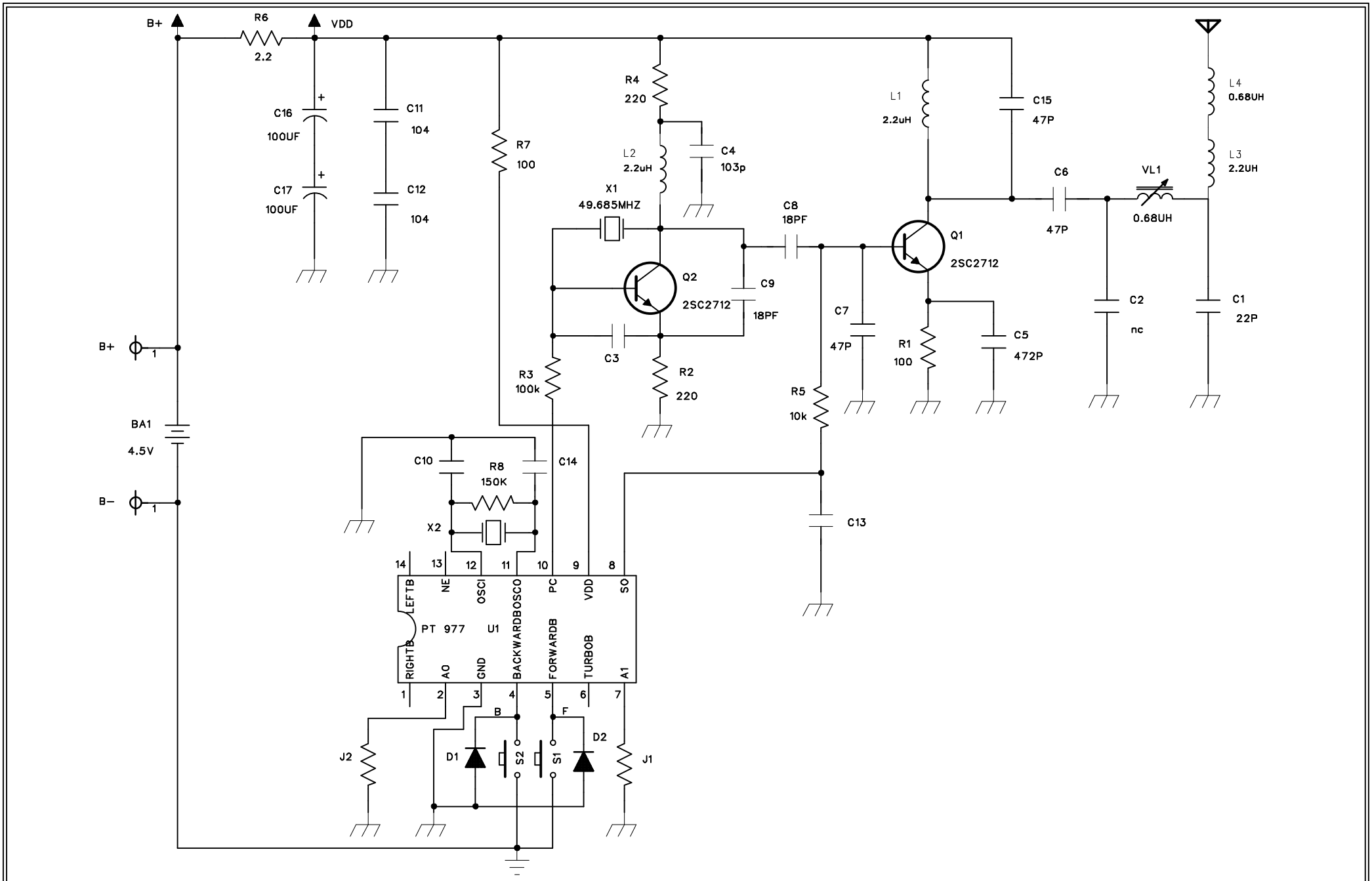

LUNG CHEONG	TITLE:	M790 TX 49MHZ REV1.1	DESIGN BY:	DRAWING BY:	APPROVED BY:	SHEET:
	FUNCTION:		ANSON	DENGTUBAO		1 of 1
	DWG NO:		2010-02-26	2010-03-02		