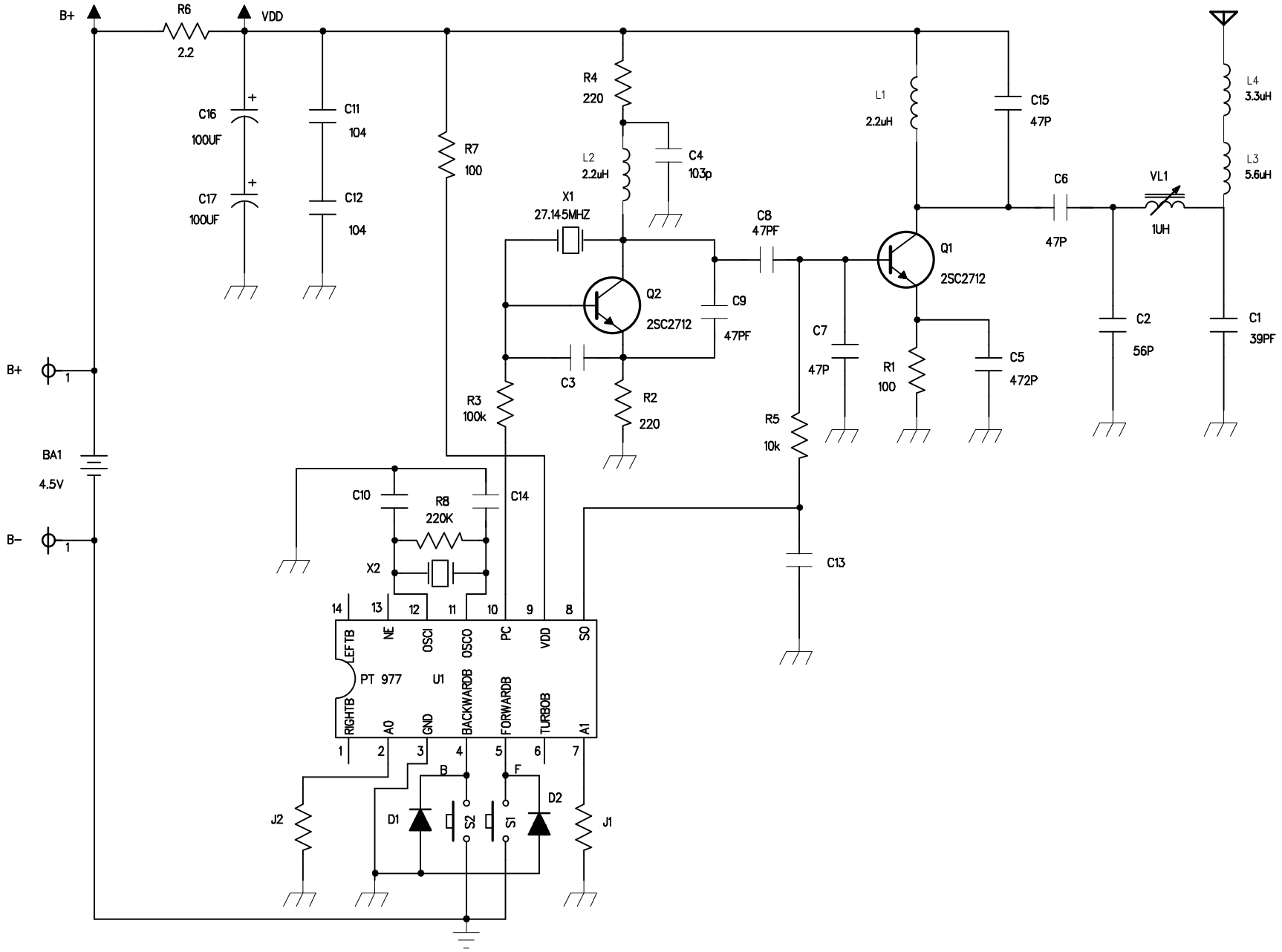

LUNG CHEONG	TITLE:	M790 TX 27MHZ	DESIGN BY:	DRAWING BY:	APPROVED BY:	SHEET:
	FUNCTION:	LC55702 Wilson 27MHZ TX	ANSON	DENGTUBAO		1 of 1
	DWG NO:	DZ01-00M790-02	2010-02-26	2010-03-02		