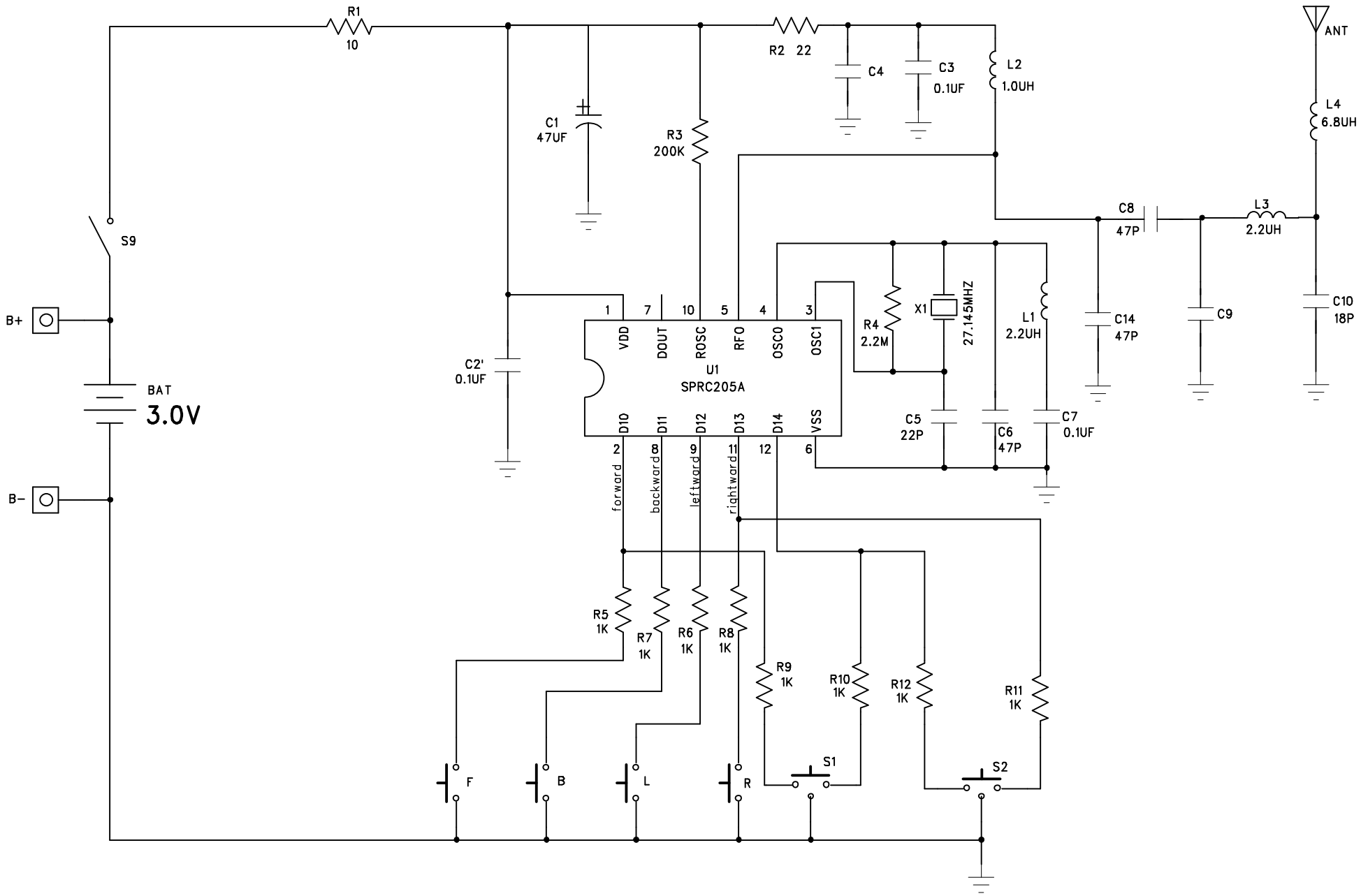

LUNG CHEONG	TITLE:	LC65411 27MHZ TX SCH	DESIGN BY:	DRAWING BY:	APPROVED BY:	SHEET:
	MODEL:	RC CHAMBER			QW SHI	1 of 1
	DWG NO:	DZ02-0G809001-01			2007-02-11	