PDF 文件使用 "pdfFactory Pro" 试用版本创建 www.fineprint.com.cn

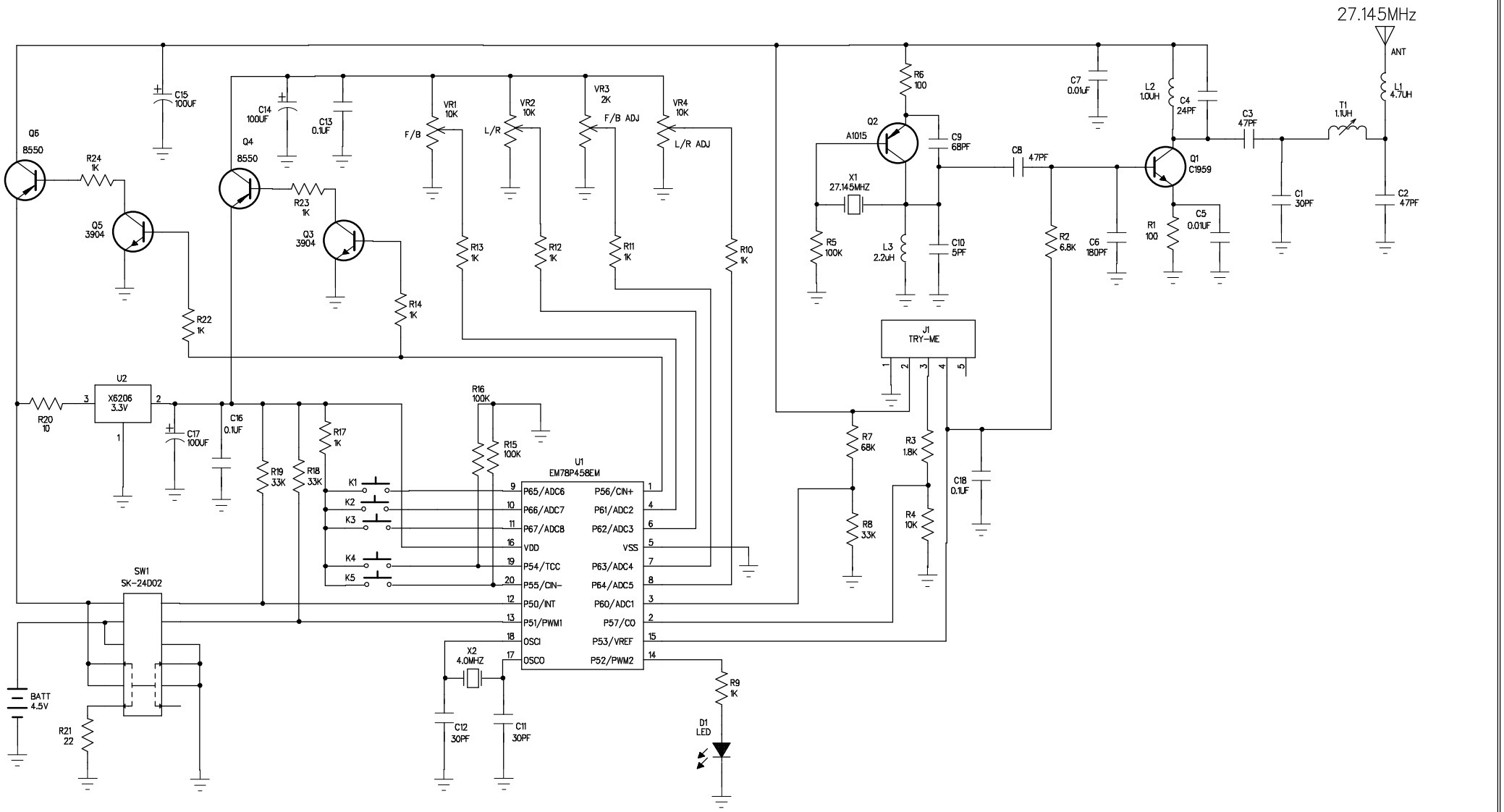

Learning Curve Brands, Inc.	TITLE:	35654 27TX	DESIGN BY:	DRAWING BY:	APPROVED BY:	SHEET:
	option:		F.X ZENG	F.X.ZENG		1 of 1
			July.3.2008	July.3.2008		