# SECTION V

## SCHEMATIC DIAGRAMS

| HIGHEST REFERENCE DESIGNATIONS | | | | | | | | | |
|---|---|---|---|---|---|---|---|---|---|
| CP2 | A2 | PS2 | J3 | B2 | CB1 | W6 | PC2 | E2 | TB1 | P4 |

| REFERENCE DESIGNATIONS NOT USED | | | | | | | | | |
|---|---|---|---|---|---|---|---|---|---|
| | | | | | | | | | |

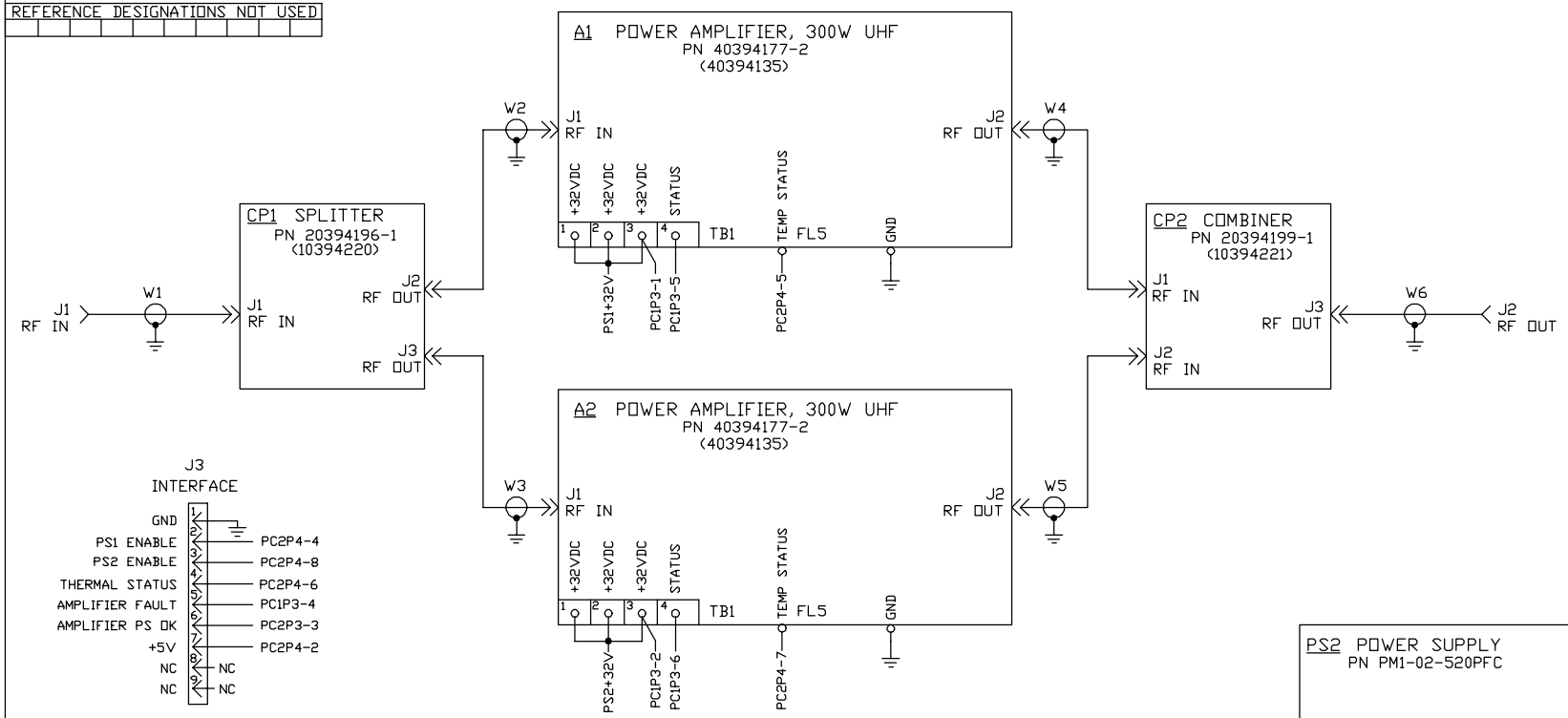





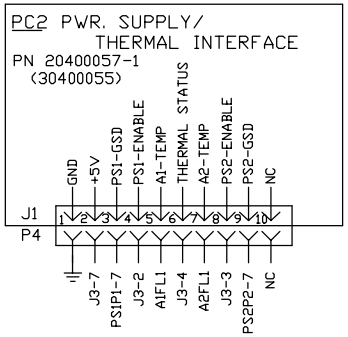


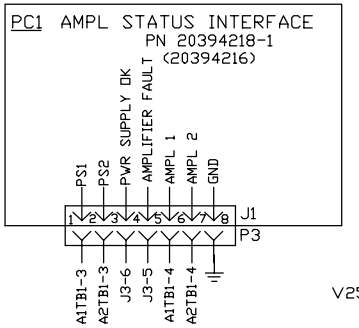


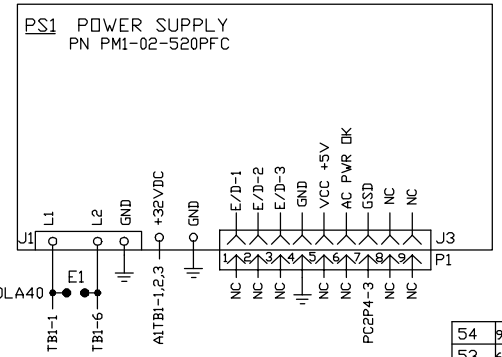


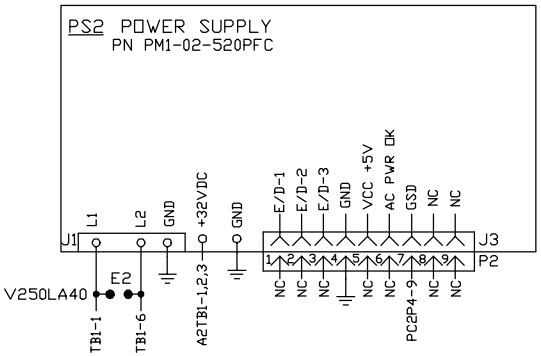


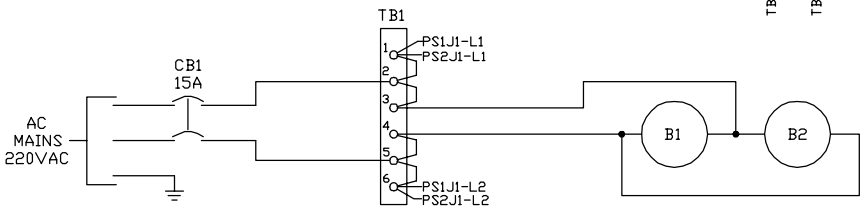


| ECN | DATE | BY | | CHK | CHK | APPV'L |
|---|---|---|---|---|---|---|
| 54 | 9/19/00 | RHD | ADDED PC2 PWR SUPPLY/THERMAL INTERFACE | | | |
| 53 | 6-30-99 | CTT | ADDED PC1, E1,E2, REMOVE SCH. IN CP1 & CP2 | | | |
| 52 | 5-19-99 | CTT | ADDED RESISTORS R1 TO CP1,CP2 | | | |

| NEXT ASSY: | | DRAFT | 5-7-99 | CTT |
|---|---|---|---|---|
| | | DR. CHK | | |
| VERSION | | M. ENGR | | |
| MODEL | | E. ENGR | | |
| SCALE | | RELEASE | | |

TOLERANCES - EXCEPT AS NOTED
DECIMAL .XX ± .010 .XXX ± .005
FRACTIONAL ± 1/64'
ANGULAR ± 1/2 DEG

EMCEE BROADCAST PRODUCTS INC.
WHITE HAVEN, PA. 18661

# INTERCONNECTION DIAGRAM, 500W UHF AMPLIFIER

30394008 REV 54

SHEET 1 OF 1

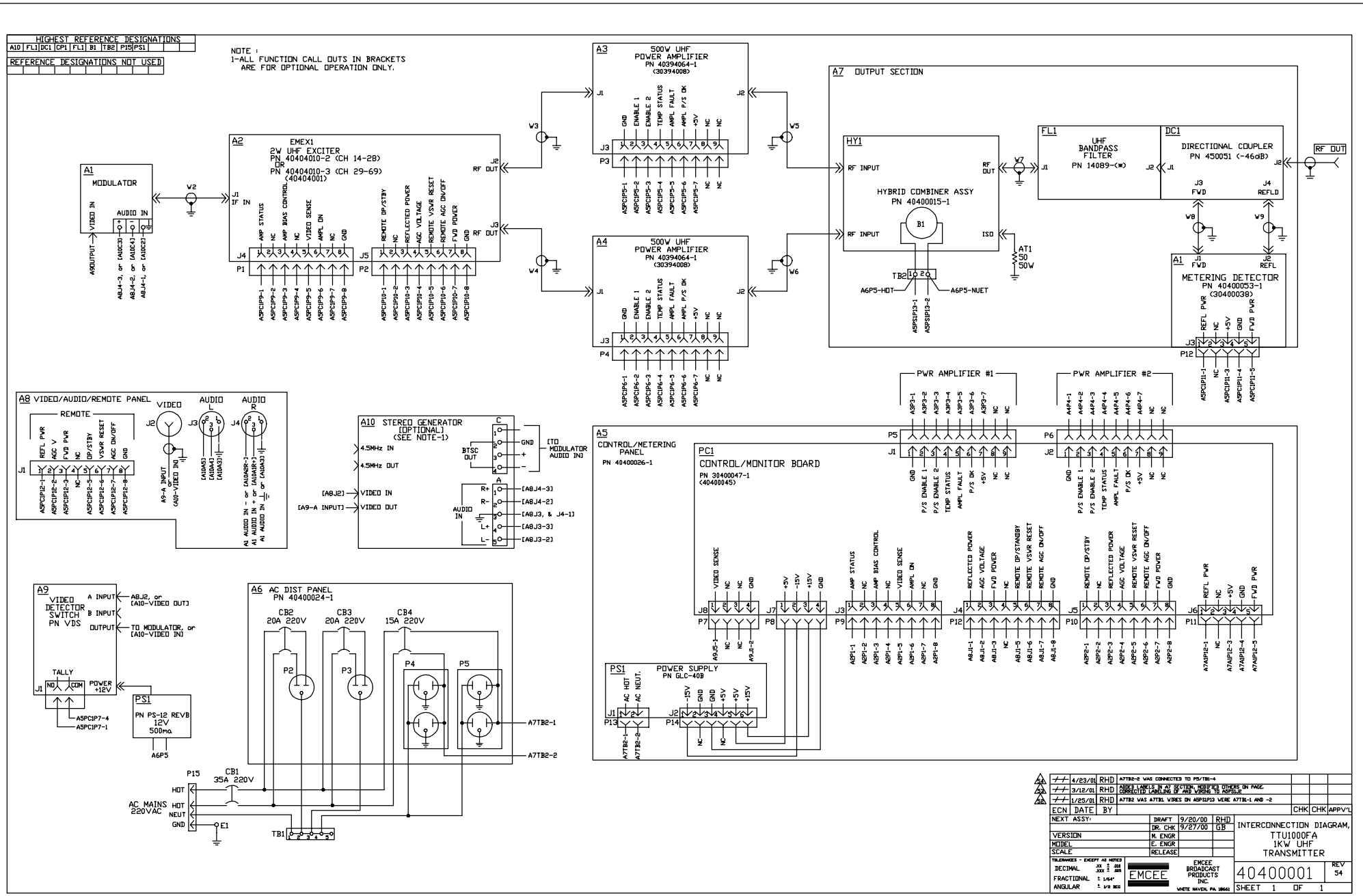
HIGHEST REFERENCE DESIGNATIONS
A10 FL1 DC1 CP1 FL1 B1 TB2 P15 PS1
REFERENCE DESIGNATIONS NOT USED
NOTE :
1-ALL FUNCTION CALL OUTS IN BRACKETS ARE FOR OPTIONAL OPERATION ONLY.
A1 MODULATOR
A2 EMEX1 2W UHF EXCITER PN 40404010-2 (CH 14-28) OR PN 40404010-3 (CH 29-69) (40404001)
A3 500W UHF POWER AMPLIFIER PN 40394064-1 (3039400B)
A4 500W UHF POWER AMPLIFIER PN 40394064-1 (3039400B)
A7 OUTPUT SECTION
HY1 HYBRID COMBINER ASSY PN 40400015-1
FL1 UHF BANDPASS FILTER PN 14089-(*)
DC1 DIRECTIONAL COUPLER PN 450051 (-46dB)
A1 METERING DETECTOR PN 40400053-1 (30400038)
RF OUT
A8 VIDEO/AUDIO/REMOTE PANEL
A10 STEREO GENERATOR (OPTIONAL) (SEE NOTE-1)
A5 CONTROL/METERING PANEL PN 40400026-1
PC1 CONTROL/MONITOR BOARD PN 30400047-1 (40400045)
PWR AMPLIFIER #1
PWR AMPLIFIER #2
A9 VIDEO DETECTOR SWITCH PN VDS
A6 AC DIST PANEL PN 40400024-1
PS1 POWER SUPPLY PN GLC-40B
PS1 PN PS-12 REVB 12V 500mA
CB1 35A 220V
CB2 20A 220V
CB3 20A 220V
CB4 15A 220V
AC MAINS 220VAC
TB1
E1
4/23/01 RHD A7TB2-2 WAS CONNECTED TO PS/TB1-4
3/12/01 RHD ADDED LABELS IN A7 SECTION, MODIFIED OTHERS ON PAGE. CORRECTED LABELING OF AND WIRING TO ASP5J8
1/25/01 RHD A7TB2 WAS A7TB1 WIRES ON ASP5IP13 WERE A7TB-1 AND -2
ECN DATE BY CHK CHK APPV'L
NEXT ASSY: DRAFT 9/20/00 RHD
DR. CHK 9/27/00 GB
VERSION M. ENGR
MODEL E. ENGR
SCALE RELEASE
TOLERANCES - EXCEPT AS NOTED
DECIMAL .XX ± .01 .XXX ± .005
FRACTIONAL ± 1/64"
ANGULAR ± 1/2 DEG
EMCEE BROADCAST PRODUCTS INC. WHITE HAVEN, PA 18661
INTERCONNECTION DIAGRAM, TTU1000FA 1KW UHF TRANSMITTER
40400001 REV 54
SHEET 1 OF 1

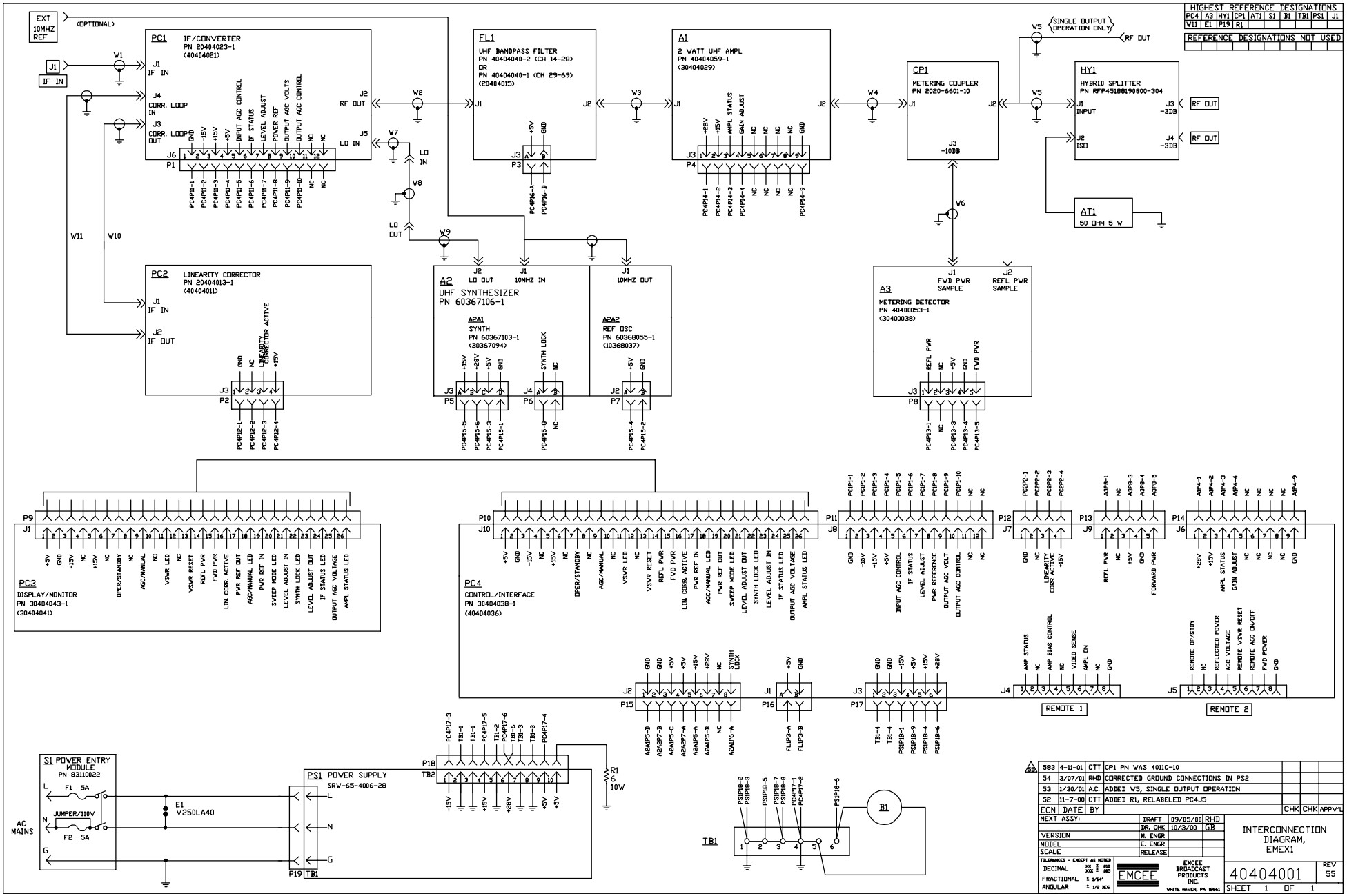
HIGHEST REFERENCE DESIGNATIONS
PC4 A3 HY1 CP1 AT1 S1 B1 TB1 PS1 J1
W11 E1 P19 R1
REFERENCE DESIGNATIONS NOT USED
EXT 10MHZ REF
(OPTIONAL)
PC1 IF/CONVERTER PN 20404023-1 (40404021)
FL1 UHF BANDPASS FILTER PN 40404040-2 (CH 14-28) OR PN 40404040-1 (CH 29-69) (20404015)
A1 2 WATT UHF AMPL PN 40404059-1 (30404029)
CP1 METERING COUPLER PN 2020-6601-10
HY1 HYBRID SPLITTER PN RFP45188190800-304
AT1 50 OHM 5 W
PC2 LINEARITY CORRECTOR PN 20404013-1 (40404011)
A2 UHF SYNTHESIZER PN 60367106-1
A2A1 SYNTH PN 60367103-1 (30367094)
A2A2 REF OSC PN 60368055-1 (10368037)
A3 METERING DETECTOR PN 40400053-1 (30400038)
PC3 DISPLAY/MONITOR PN 30404043-1 (30404041)
PC4 CONTROL/INTERFACE PN 30404038-1 (40404036)
REMOTE 1
REMOTE 2
S1 POWER ENTRY MODULE PN 83110022
PS1 POWER SUPPLY SRV-65-4006-28
AC MAINS
JUMPER/110V
F1 5A
F2 5A
V250LA40
R1 6 10W
B1
TB1
SINGLE OUTPUT OPERATION ONLY
RF OUT
LO IN
LO OUT
583 4-11-01 CTT CP1 PN WAS 4011C-10
54 3/07/01 RHD CORRECTED GROUND CONNECTIONS IN PS2
53 1/30/01 A.C. ADDED W5, SINGLE OUTPUT OPERATION
52 11-7-00 CTT ADDED R1, RELABELED PC4J5
ECN DATE BY CHK CHK APPV'L
NEXT ASSY:
DRAFT 09/05/00 RHD
DR. CHK 10/3/00 GB
VERSION
MODEL
SCALE
M. ENGR
E. ENGR
RELEASE
TOLERANCES - EXCEPT AS NOTED
DECIMAL .XX ± .03 .XXX ± .005
FRACTIONAL ± 1/64"
ANGULAR ± 1/2 DEG
EMCEE
EMCEE BROADCAST PRODUCTS INC.
WHITE HAVEN, PA 18661
INTERCONNECTION DIAGRAM, EMEX1
40404001
REV 55
SHEET 1 OF 1

MODULE SCHEMATICS

ARE LISTED IN

ALPHANUMERICAL SEQUENCE

| HIGHEST REFERENCE DESIGNATIONS | | | | | | | | | |
|---|---|---|---|---|---|---|---|---|---|
| C5 | R3 | U1 | G1 | E3 | J3 | FL1 | | | |

| REFERENCE DESIGNATIONS NOT USED | | | | | | | | | |
|---|---|---|---|---|---|---|---|---|---|
| | | | | | | | | | |

NOTES: UNLESS OTHERWISE SPECIFIED
1- COMPONENTS FL1 AND J1-J3 ARE NOT LOCATED ON BD ASSY.
2- FOR G1 (RTX0771AD), R2 IS 47K, C5 IS A 0 OHM RESISTOR AND R3 IS REMOVED.

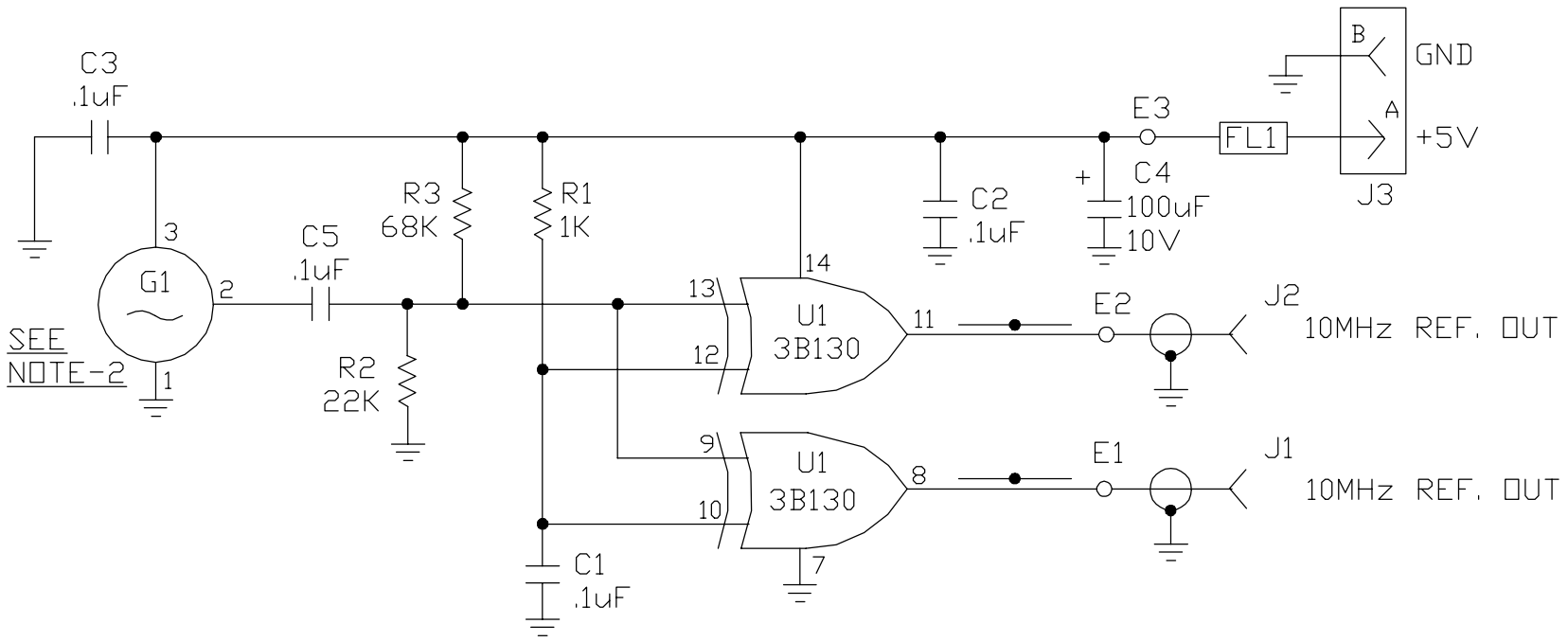


SPARE

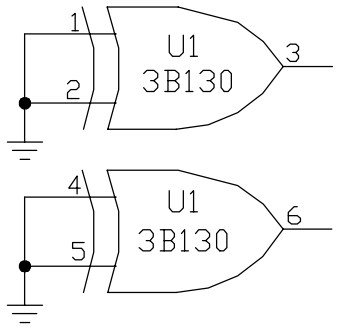


| ECN | DATE | BY | | | | |
|---|---|---|---|---|---|---|
| B | 12/10/98 | TAB | ADDED NOTE-2. | CTT | | CTT |
| A 293 | 8-10-95 | VN | ADDED C5, R3; R2 VALUE WAS 4.7K | CTT | DB | DB |
| | | | RELEASED AT REV 57 | CHK | CHK | APPV'L |

| | | | |
|---|---|---|---|
| NEXT ASSY: | DRAFT | 7-03-90 | SMP |
| | DR. CHK | 10-4-90 | CTT |
| VERSION | M. ENGR | | |
| MODEL | E. ENGR | 11-8-90 | JL |
| SCALE | RELEASE | 6-14-95 | BN |

TOLERANCES - EXCEPT AS NOTED
DECIMAL .XX ± .010, .XXX ± .005
FRACTIONAL ± 1/64"
ANGULAR ± 1/2 DEG

EMCEE
ELECTRONICS MISSILES & COMMUNICATIONS INC.
WHITE HAVEN, PA. 18661

# SCHEMATIC DIAGRAM, REF. OSCILLATOR

10368037 REV B

SHEET 1 OF 1

| HIGHEST REFERENCE DESIGNATIONS | | | | | | | | | |
|---|---|---|---|---|---|---|---|---|---|
| U1 | R1 | J3 | E3 | C17 | W4 | | | | |

| REFERENCE DESIGNATIONS NOT USED | | | | | | | | | |
|---|---|---|---|---|---|---|---|---|---|
| | | | | | | | | | |

NOTES :
1-CAPACITORS C7 THRU C12 ARE FOR 560MHz (CH30) AND BELOW.

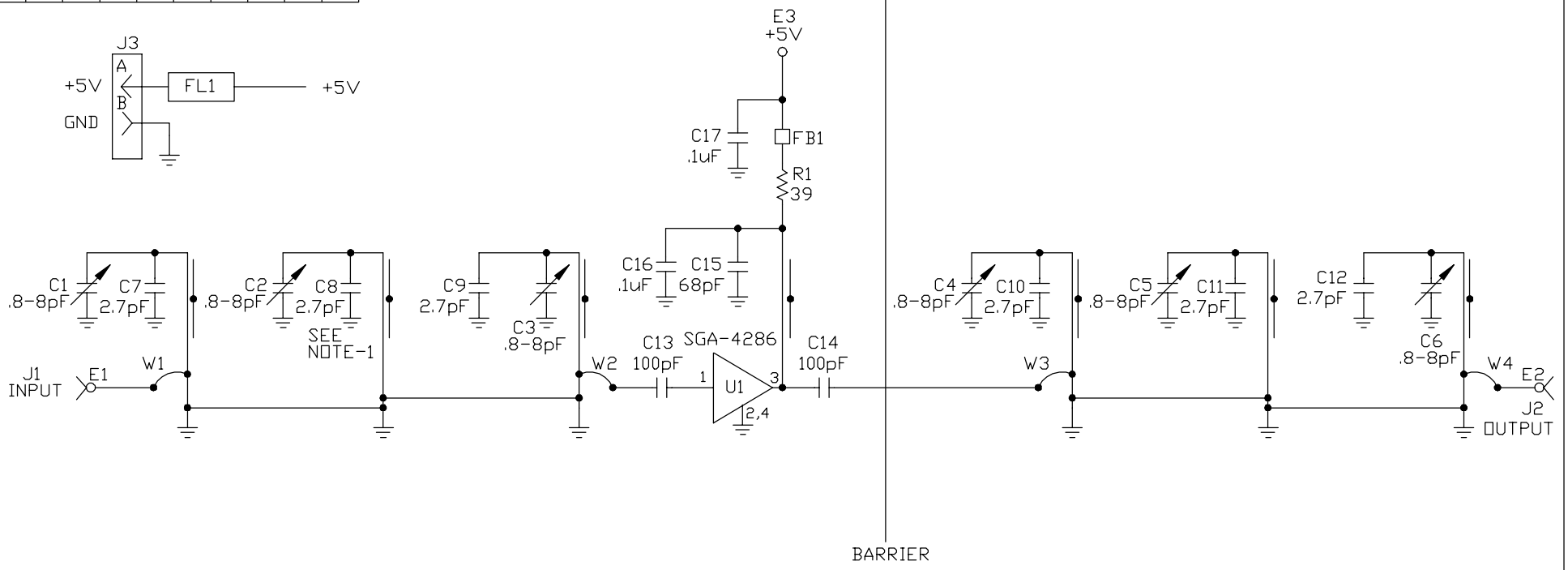


| ECN | DATE | BY | | | CHK | CHK | APPV'L |
|---|---|---|---|---|---|---|---|
| NEXT ASSY: | | | DRAFT | 7-11-00 | CTT | | |
| | | | DR. CHK | | | | |
| VERSION | | | M. ENGR | | | | |
| MODEL | | | E. ENGR | | | | |
| SCALE | | | RELEASE | | | | |

TOLERANCES - EXCEPT AS NOTED
DECIMAL .XX ± .010 .XXX ± .005
FRACTIONAL ± 1/64"
ANGULAR ± 1/2 DEG

EMCEE
EMCEE BROADCAST PRODUCTS INC.
WHITE HAVEN, PA. 18661

SCHEMATIC DIAGRAM, UHF BANDPASS FILTER

20404015 REV 51

SHEET 1 OF 1

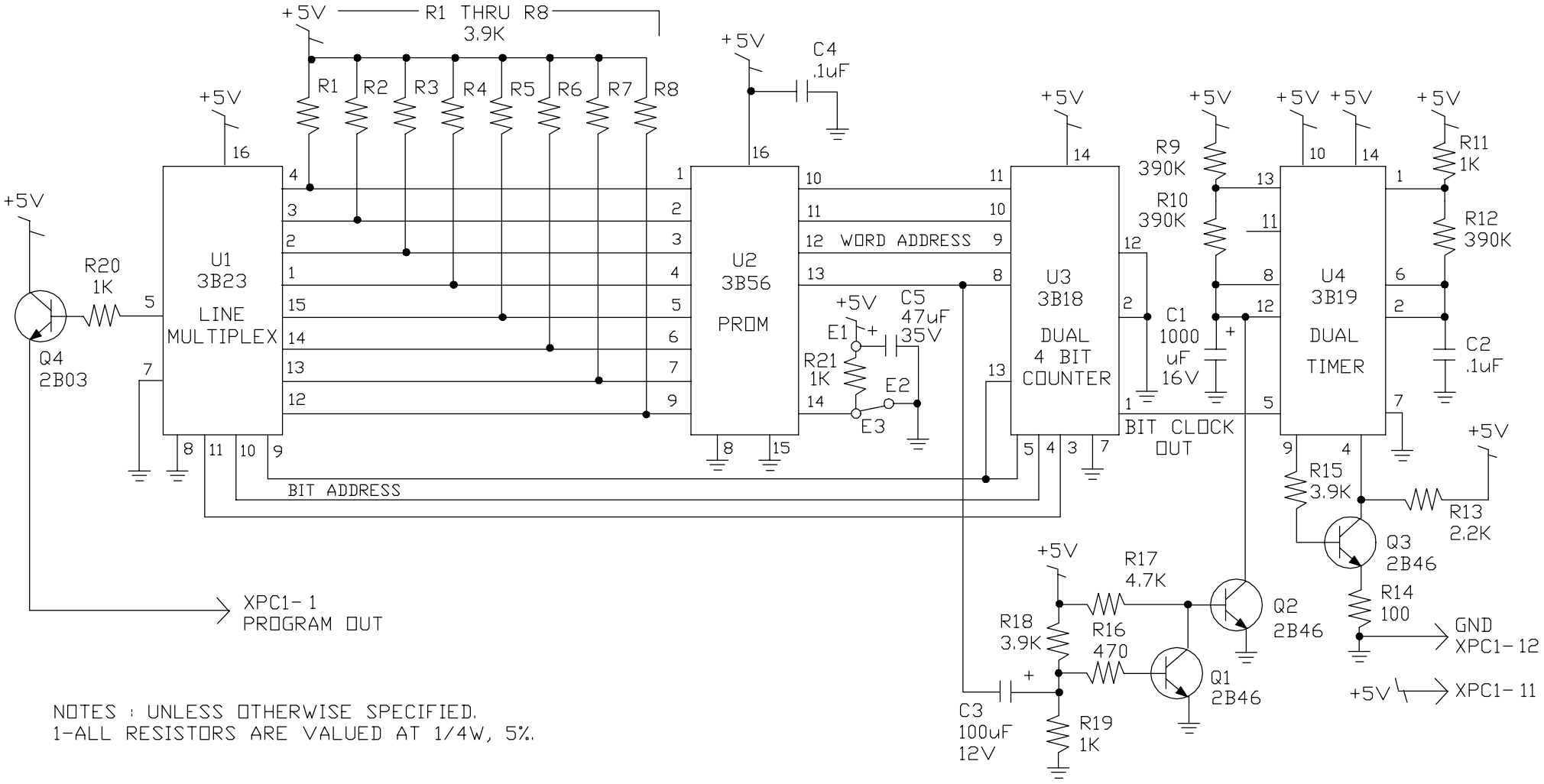


NOTES : UNLESS OTHERWISE SPECIFIED.
1-ALL RESISTORS ARE VALUED AT 1/4W, 5%.

| HIGHEST REFERENCE DESIGNATIONS | | | | | | | | | | |
|---|---|---|---|---|---|---|---|---|---|---|
| U4 | Q4 | C5 | R21 | | | | | | | XPC1 |

| REFERENCE DESIGNATIONS NOT USED | | | | | | | | | | | |
|---|---|---|---|---|---|---|---|---|---|---|---|
| | | | | | | | | | | | |

| ECN | DATE | BY | | CHK | CHK | APPV'L |
|---|---|---|---|---|---|---|
| NEXT ASSY: | | DRAFT | 4-7-87 | C.T.T | | |
| | | DR. CHK | 5-22-87 | W.J.H | | |
| VERSION | | M. ENGR | 7-23-87 | JC | | |
| MODEL | | E. ENGR | | | | |
| SCALE | | RELEASE | 8-27-87 | R.G.N | | |

TOLERANCES - EXCEPT AS NOTED
DECIMAL .XX ± .010 .XXX ± .005
FRACTIONAL ± 1/64"
ANGULAR ± 1/2 DEG

EMCEE
ELECTRONICS MISSILES & COMMUNICATIONS INC.
WHITE HAVEN, PA. 18661

# SCHEMATIC DIAGRAM, DIGITAL CODE IDENTIFICATION UNIT

20258029 REV A

SHEET 1 OF 1

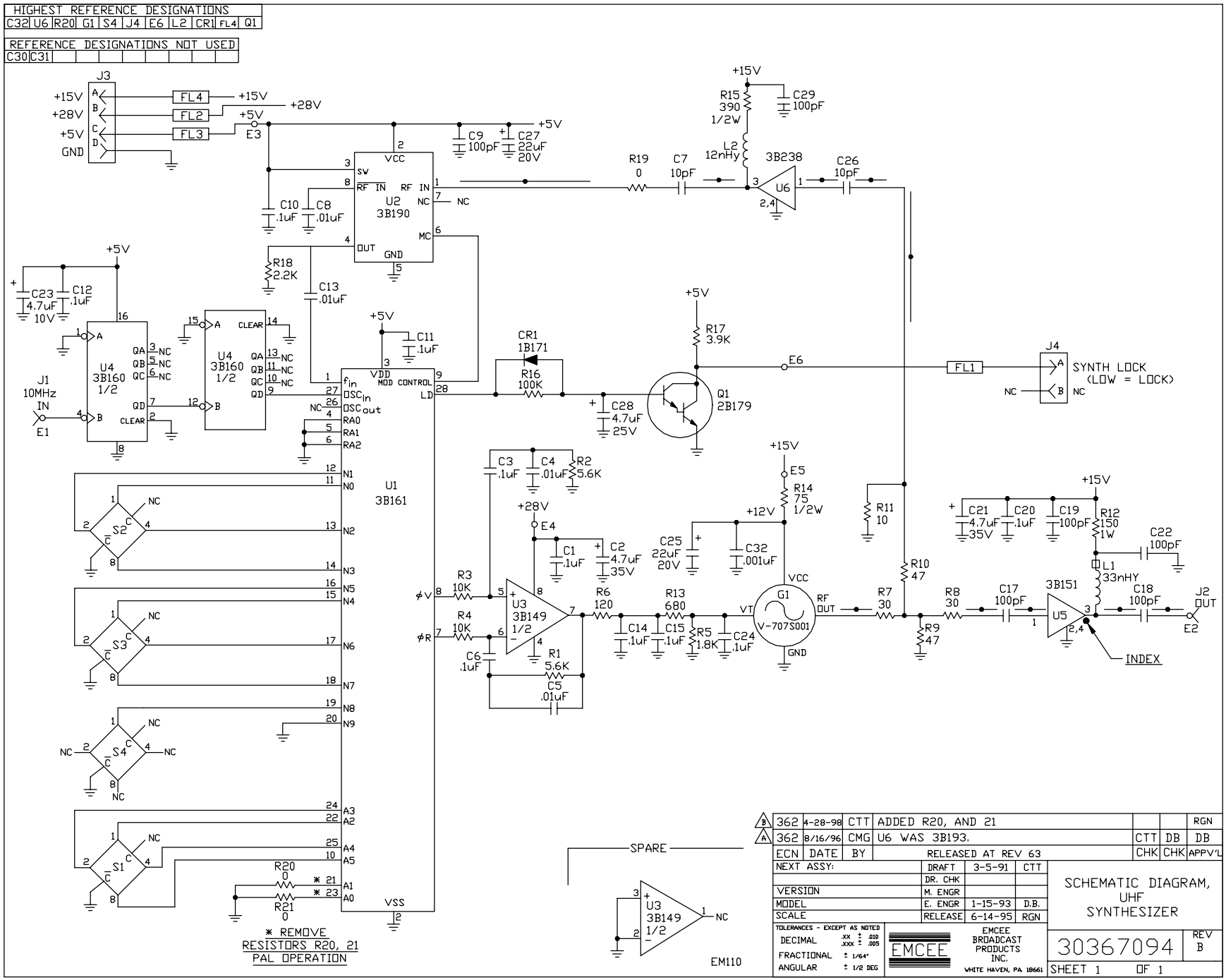
HIGHEST REFERENCE DESIGNATIONS
C32 U6 R20 G1 S4 J4 E6 L2 CR1 FL4 Q1
REFERENCE DESIGNATIONS NOT USED
C30 C31
J3
+15V
+28V
+5V
GND
FL4
FL2
FL3
E3
U2
3B190
U1
3B161
U3
3B149
1/2
U4
3B160
1/2
U6
3B238
U5
3B151
G1
V-707S001
Q1
2B179
CR1
1B171
J1
10MHz
IN
E1
J4
SYNTH LOCK
(LOW = LOCK)
FL1
E6
E5
E4
E2
OUT
INDEX
SPARE
EM110
* REMOVE
RESISTORS R20, 21
PAL OPERATION
VCO
MOD CONTROL
VDD
VSS
RF IN
RF OUT
VT
SV
NC
GND
CLEAR
S1
S2
S3
S4
R1 5.6K
R2 5.6K
R3 10K
R4 10K
R5 1.8K
R6 120
R7 30
R8 30
R9 47
R10 47
R11 10
R12 150 1W
R13 680
R14 75 1/2W
R15 390 1/2W
R16 100K
R17 3.9K
R18 2.2K
R19 0
R20 0
R21 0
C1 .1uF
C2 4.7uF 35V
C3 .1uF
C4 .01uF
C5 .01uF
C6 .1uF
C7 10pF
C8 .01uF
C9 100pF
C10 .1uF
C11 .1uF
C12 .1uF
C13 .01uF
C14 .1uF
C15 .1uF
C17 100pF
C18 100pF
C19 100pF
C20 .1uF
C21 4.7uF 35V
C22 100pF
C23 4.7uF 10V
C24 .1uF
C25 22uF 20V
C26 10pF
C27 22uF 20V
C28 4.7uF 25V
C29 100pF
C32 .001uF
L1 33nHY
L2 12nHy
B 362 4-28-98 CTT ADDED R20, AND 21 RGN
A 362 8/16/96 CMG U6 WAS 3B193. CTT DB DB
ECN DATE BY RELEASED AT REV 63 CHK CHK APPV'L
NEXT ASSY:
VERSION
MODEL
SCALE
DRAFT 3-5-91 CTT
DR. CHK
M. ENGR
E. ENGR 1-15-93 D.B.
RELEASE 6-14-95 RGN
TOLERANCES - EXCEPT AS NOTED
DECIMAL .XX ± .010 .XXX ± .005
FRACTIONAL ± 1/64"
ANGULAR ± 1/2 DEG
EMCEE
EMCEE BROADCAST PRODUCTS INC.
WHITE HAVEN, PA 18661
SCHEMATIC DIAGRAM, UHF SYNTHESIZER
30367094
REV B
SHEET 1 OF 1

| HIGHEST REFERENCE DESIGNATIONS | | | | | | | | | |
|---|---|---|---|---|---|---|---|---|---|
| J3 | U4 | CR2 | R16 | C14 | FB1 | JP2 | E2 | | |

| REFERENCE DESIGNATIONS NOT USED | | | | | | | | | |
|---|---|---|---|---|---|---|---|---|---|
| | | | | | | | | | |

NOTES :
1-COMPONENTS J1, 2, 3, ARE NOT LOCATED ON PC BOARD.
2-FOR ANALOG OPERATIONS SHUNT IS ON PINS 1 AND 2. FOR DIGITAL MOVE SHUNT TO PINS 2 AND 3, JP1,JP2. THIS IS TO BE DETERMINED BY THE TEST DEPT.

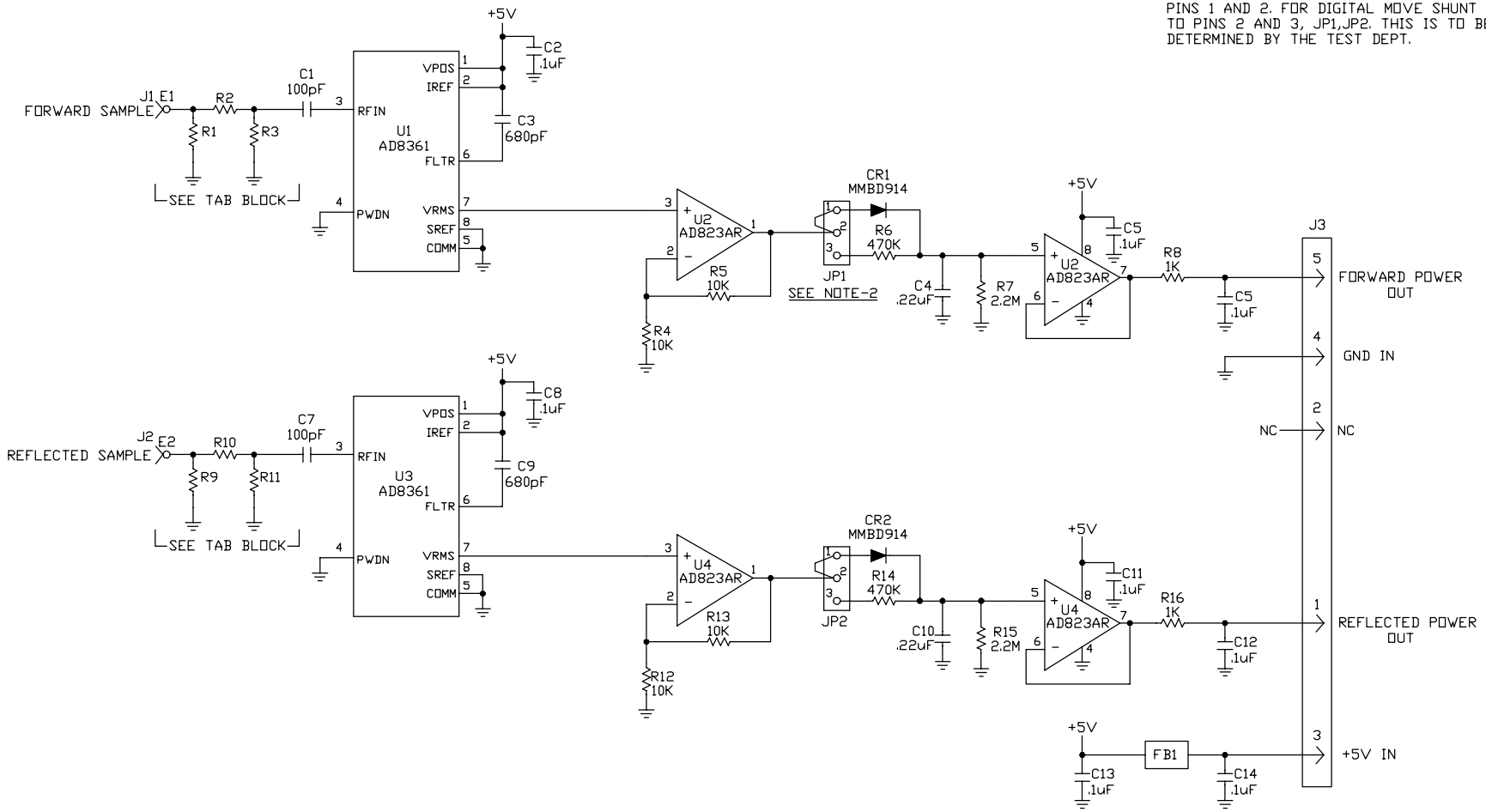


| TABULATION BLOCK | | |
|---|---|---|
| RESISTORS IN OHMS | 1KW | 2KW |
| R1, R9 | 68 | 390 |
| R2, R10 | 150 | 12 |
| R3, R11 | 33 | 75 |

| ECN | DATE | BY | | CHK | CHK | APPV'L |
|---|---|---|---|---|---|---|
| 53 | 11-9-00 | CTT | TAB BLOCK,1KW WAS 180,30,AND 68 | | | |
| 52 | 10/3/00 | RHD | RENUMBERED PINS OF J3 | | | |

| | | | |
|---|---|---|---|
| NEXT ASSY: | DRAFT | 7-13-00 | CTT |
| | DR. CHK | | |
| VERSION | M. ENGR | | |
| MODEL | E. ENGR | 7-20-00 | JMJ |
| SCALE | RELEASE | | |

TOLERANCES - EXCEPT AS NOTED
DECIMAL .XX ± .010 .XXX ± .005
FRACTIONAL ± 1/64"
ANGULAR ± 1/2 DEG

EMCEE BROADCAST PRODUCTS INC.
WHITE HAVEN, PA. 18661

# SCHEMATIC DIAGRAM, METERING DETECTOR

30400038 REV 53

SHEET 1 OF 1

| HIGHEST REFERENCE DESIGNATIONS | | | | | | | | | |
|---|---|---|---|---|---|---|---|---|---|
| CR5 | R34 | Q6 | FB2 | C35 | E6 | U3 | J3 | | |

| REFERENCE DESIGNATIONS NOT USED | | | | | | | | | |
|---|---|---|---|---|---|---|---|---|---|
| | | | | | | | | | |

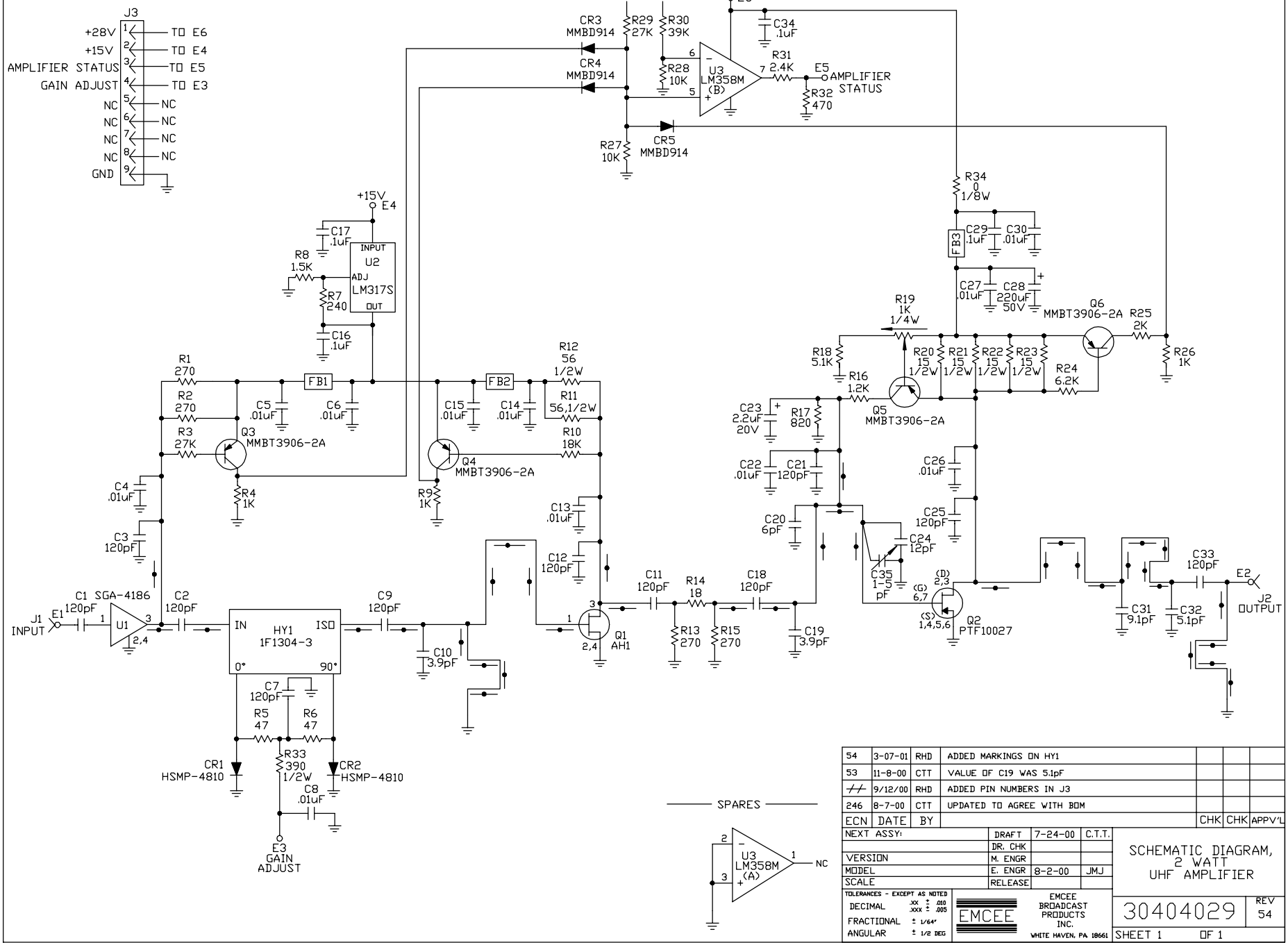


| ECN | DATE | BY | | CHK | CHK | APPV'L |
|---|---|---|---|---|---|---|
| 54 | 3-07-01 | RHD | ADDED MARKINGS ON HY1 | | | |
| 53 | 11-8-00 | CTT | VALUE OF C19 WAS 5.1pF | | | |
| // | 9/12/00 | RHD | ADDED PIN NUMBERS IN J3 | | | |
| 246 | 8-7-00 | CTT | UPDATED TO AGREE WITH BOM | | | |

| | | | |
|---|---|---|---|
| NEXT ASSY: | DRAFT | 7-24-00 | C.T.T. |
| | DR. CHK | | |
| VERSION | M. ENGR | | |
| MODEL | E. ENGR | 8-2-00 | JMJ |
| SCALE | RELEASE | | |

TOLERANCES - EXCEPT AS NOTED
DECIMAL .XX ± .010 .XXX ± .005
FRACTIONAL ± 1/64"
ANGULAR ± 1/2 DEG

EMCEE
EMCEE BROADCAST PRODUCTS INC.
WHITE HAVEN, PA 18661

SCHEMATIC DIAGRAM, 2 WATT UHF AMPLIFIER

30404029 REV 54

SHEET 1 OF 1

NOTE:
1-MARK REV LEVEL PER SHEET 1 of 1
AND SPEC A232-107-3.

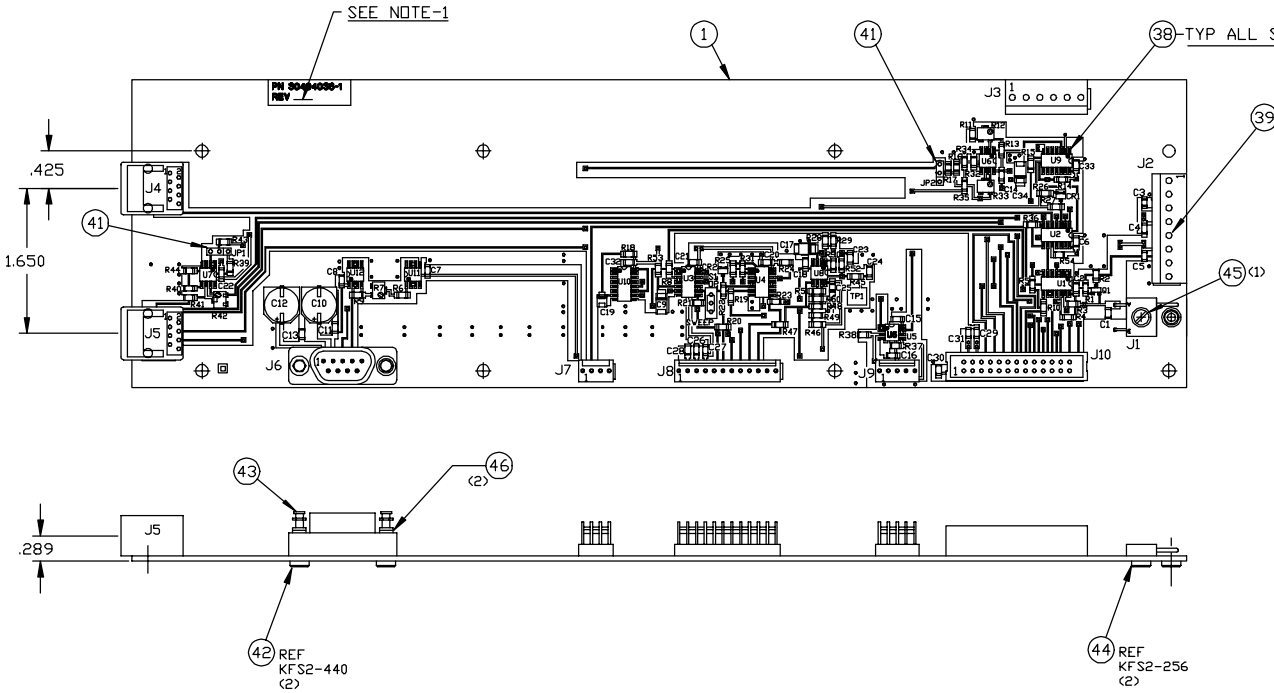


(-1) PCB ASSY, CONTROL/INTERFACE

| ECN | DATE | BY | | CHK | CHK | APPV'L |
|---|---|---|---|---|---|---|
| 54 | 12/26/00 | A.C. | ITEM 27 WAS PN 22-23-2031 | | | |
| 53 | 11/21/00 | A.C. | ADDED C34, AND ITEM 46 | | | |
| 52 | 11-3-00 | CTT | ITEM 8 PN WAS 74HC123N | | | |

| | | | |
|---|---|---|---|
| NEXT ASSY: SEE DASH No. | DRAFT | 8-28-00 | CTT |
| | DR. CHK | | |
| VERSION | M. ENGR | | |
| MODEL | E. ENGR | | |
| SCALE 1=1 | RELEASE | | |

TOLERANCES - EXCEPT AS NOTED
DECIMAL .XX ± .010 .XXX ± .005
FRACTIONAL ± 1/64"
ANGULAR ± 1/2 DEG

EMCEE BROADCAST PRODUCTS INC.
WHITE HAVEN, PA 18661

PCB ASSEMBLY, CONTROL/INTERFACE EMEX1

30404038 REV 54

SHEET 1 OF 1

| HIGHEST REFERENCE DESIGNATIONS | | | | | | | | |
|---|---|---|---|---|---|---|---|---|
| DS12 | Q8 | R23 | C12 | U6 | J1 | S3 | | |

| REFERENCE DESIGNATIONS NOT USED | | | | | | | | |
|---|---|---|---|---|---|---|---|---|
| | | | | | | | | |

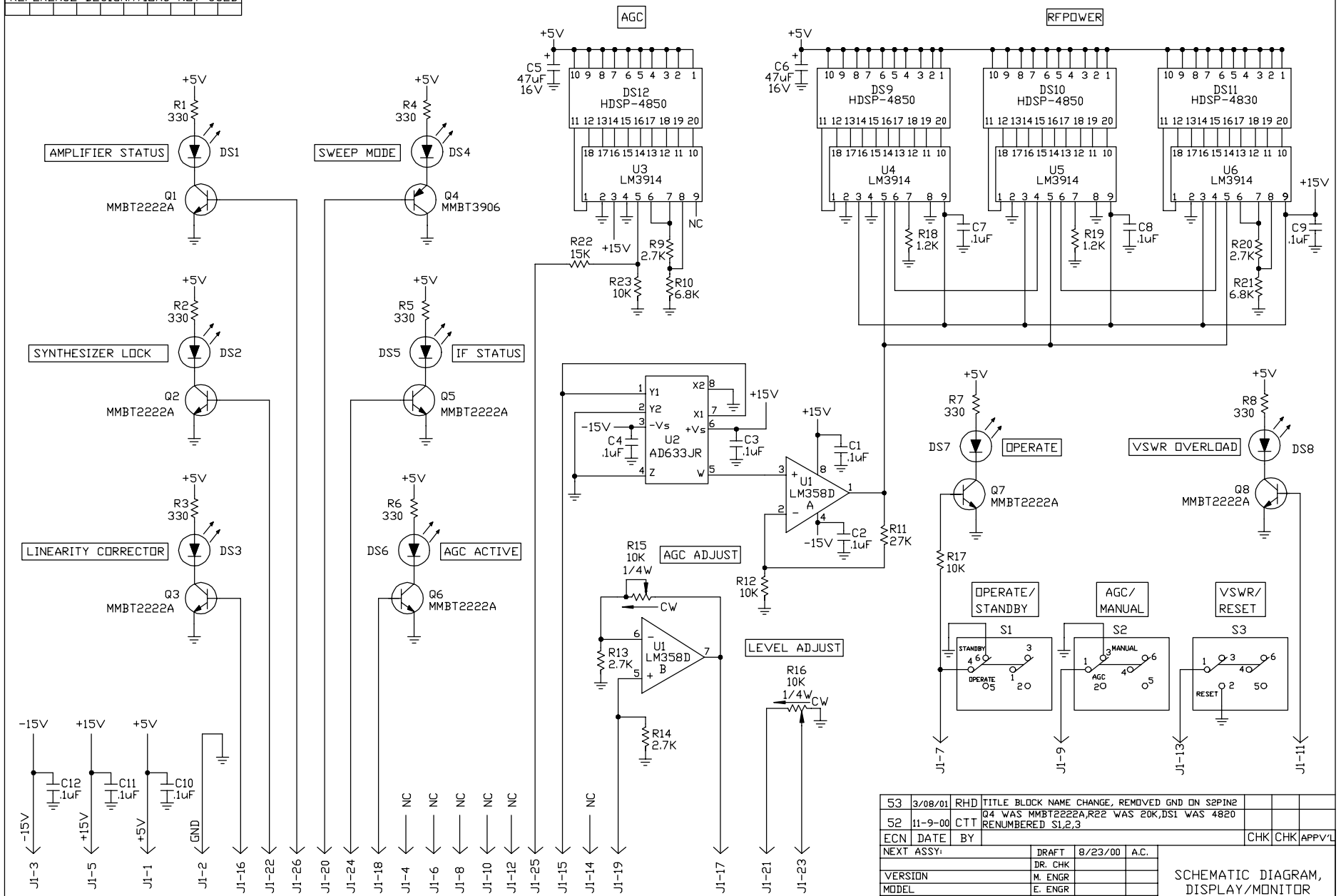


| | | | | | | | |
|---|---|---|---|---|---|---|---|
| 53 | 3/08/01 | RHD | TITLE BLOCK NAME CHANGE, REMOVED GND ON S2PIN2 | | | | |
| 52 | 11-9-00 | CTT | Q4 WAS MMBT2222A,R22 WAS 20K,DS1 WAS 4820 RENUMBERED S1,2,3 | | | | |
| ECN | DATE | BY | | | | CHK | CHK APPV'L |

| | | | |
|---|---|---|---|
| NEXT ASSY: | DRAFT | 8/23/00 | A.C. |
| | DR. CHK | | |
| VERSION | M. ENGR | | |
| MODEL | E. ENGR | | |
| SCALE | RELEASE | | |

TOLERANCES - EXCEPT AS NOTED
DECIMAL .XX ± .010 .XXX ± .005
FRACTIONAL ± 1/64"
ANGULAR ± 1/2 DEG

EMCEE BROADCAST PRODUCTS INC.
WHITE HAVEN, PA. 18661

SCHEMATIC DIAGRAM, DISPLAY/MONITOR EMEX1

30404041 REV 52

SHEET 1 OF 1

NOTES: UNLESS OTHERWISE SPECIFIED.

1-MARK REV LEVEL PER SHT 1 OF 1 AND A232-107-3.

2-APPLY SOLDER PASTE (ITEM 26) USING SOLDER STENCIL (ITEM 27).

3-SEE COORDINATES SHEET FOR COMPONENT LOCATION.

4-SOLDER DS1 THRU DS8 & S1 THRU S3 FLUSH TO PC BOARD.

5-SWITCHES S1-S3, PINS 1 AND 4 ARE MARKED COMM.

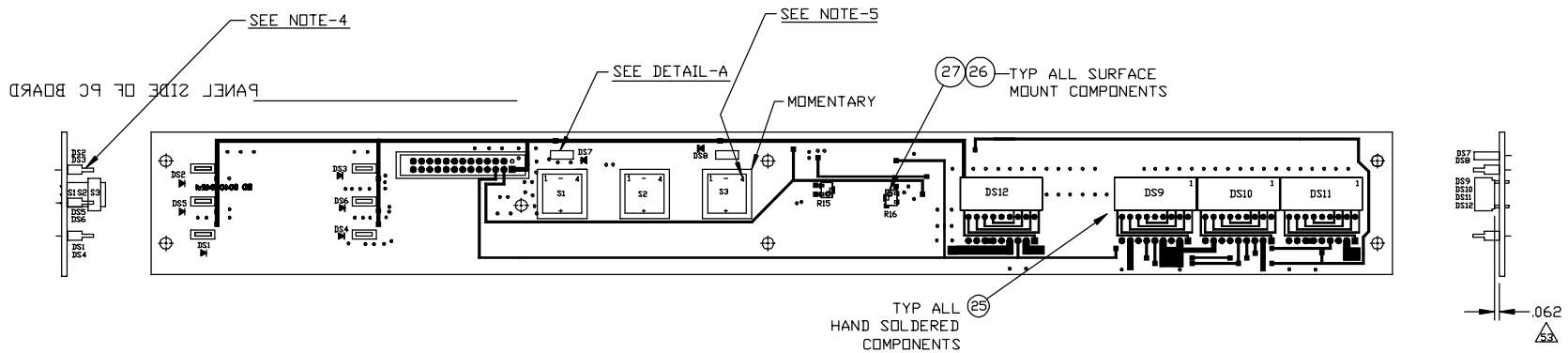


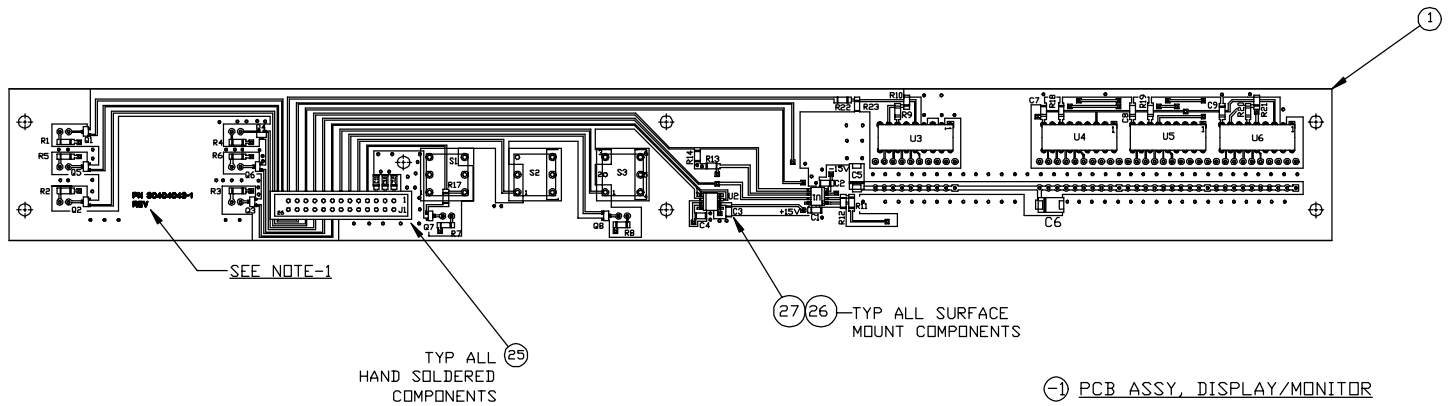


-1 PCB ASSY, DISPLAY/MONITOR

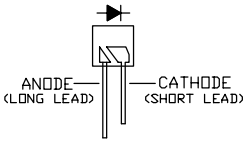


DETAIL-A
LED ORIENTATION S4

| ECN | DATE | BY | | | |
|---|---|---|---|---|---|
| S4 | 11-10-00 | CTT | ROTATED Q4, ADDED DETAIL-A | CTT | CTT |
| S3 | 10/18/00 | A.C. | DIM. .062 WAS .112 | CTT | CTT |
| P2 | 9/21/00 | A.C. | CHANGED TO AGREE WITH PC BOARD | CTT | CTT |
| | | | RELEASED AT REV 54 | CHK CHK | APPV'L |

| | | | |
|---|---|---|---|
| NEXT ASSY: | DRAFT | 8/24/00 | A.C. |
| | DR. CHK | | |
| VERSION | M. ENGR | | |
| MODEL | E. ENGR | 9/25/00 | JMJ |
| SCALE | RELEASE | 3-19-01 | CTT |

TOLERANCES - EXCEPT AS NOTED
DECIMAL .XX ± .010 .XXX ± .005
FRACTIONAL ± 1/64"
ANGULAR ± 1/2 DEG

EMCEE BROADCAST PRODUCTS INC.
WHITE HAVEN, PA. 18661

PCB ASSEMBLY, DISPLAY/MONITOR EMEX1

30404043 REV 54

SHEET 1 OF 1

| HIGHEST REFERENCE DESIGNATIONS | | | | | | | | | | |
|---|---|---|---|---|---|---|---|---|---|---|
| R64 | C71 | J3 | Q1B | L12 | T6 | Q2 | U12 | CR4 | S1 | E2 | DC1 | CP1 |

| REFERENCE DESIGNATIONS NOT USED | | | | | | | | |
|---|---|---|---|---|---|---|---|---|
| C46 | | | | | | | | |
| | | | | | | | | |

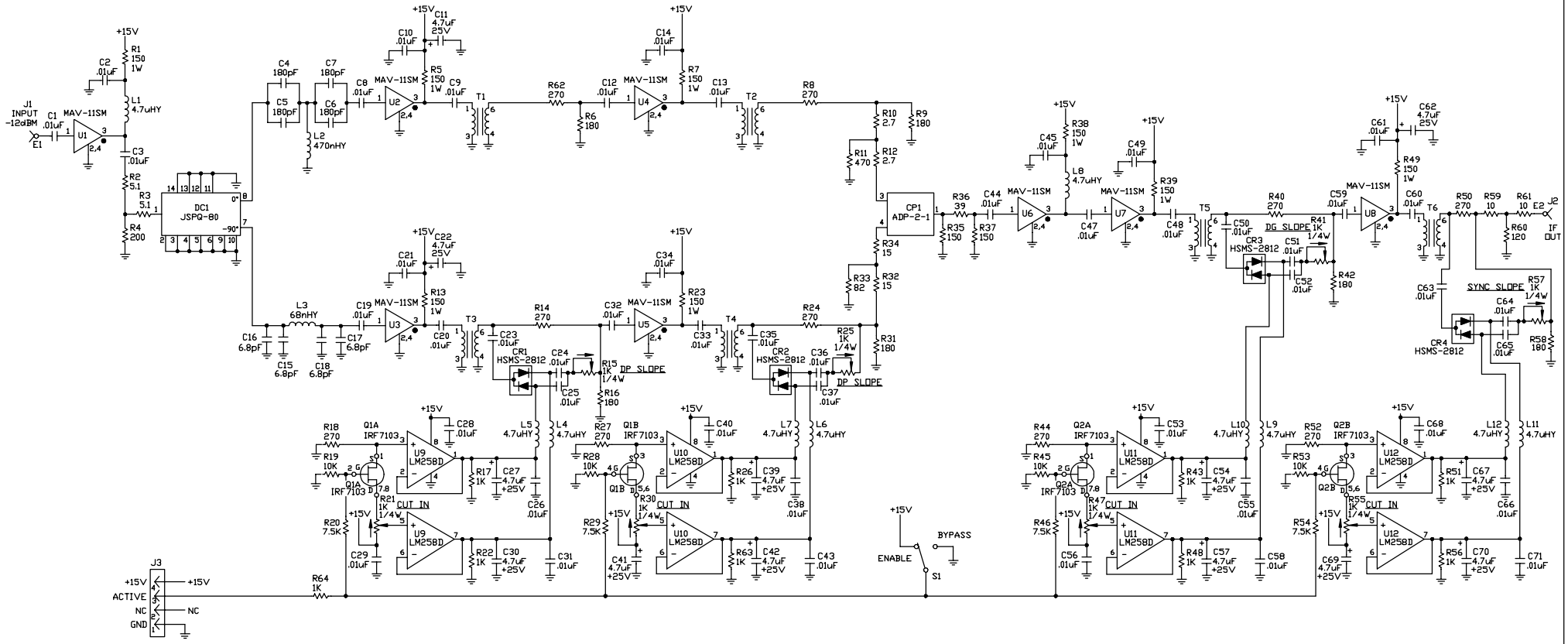


| ECN | DATE | BY | | CHK | CHK | APPV'L |
|---|---|---|---|---|---|---|
| 55 | 12/26/00 | AC. | ADDED DESCRIPTIONS TO POTS | | | |
| 54 | 11-8-00 | CTT | VALUE OF R59 AND 61 WAS 18 OHM,AND R60 WAS 62 OHM | | | |
| 53 | 10/5/00 | RHD | RENUMBERED PINS OF J3 | | | |
| EM2438 | 8-24-00 | CTT | UPDATED PER ENGINEERING MEMO | | | |

| | | | |
|---|---|---|---|
| NEXT ASSY: | DRAFT | 5-2-00 | CTT |
| | DR. CHK | | |
| VERSION | M. ENGR | | |
| MODEL | E. ENGR | 8-2-00 | JMJ |
| SCALE | RELEASE | | |

TOLERANCES - EXCEPT AS NOTED
DECIMAL .XX ± .02 .XXX ± .005
FRACTIONAL ± 1/64"
ANGULAR ± 1/2 DEG

EMCEE BROADCAST PRODUCTS INC.
WHITE HAVEN, PA 18661

SCHEMATIC DIAGRAM, LINEARITY CORRECTOR EMEX1

40404011 REV 55

SHEET 1 OF 1

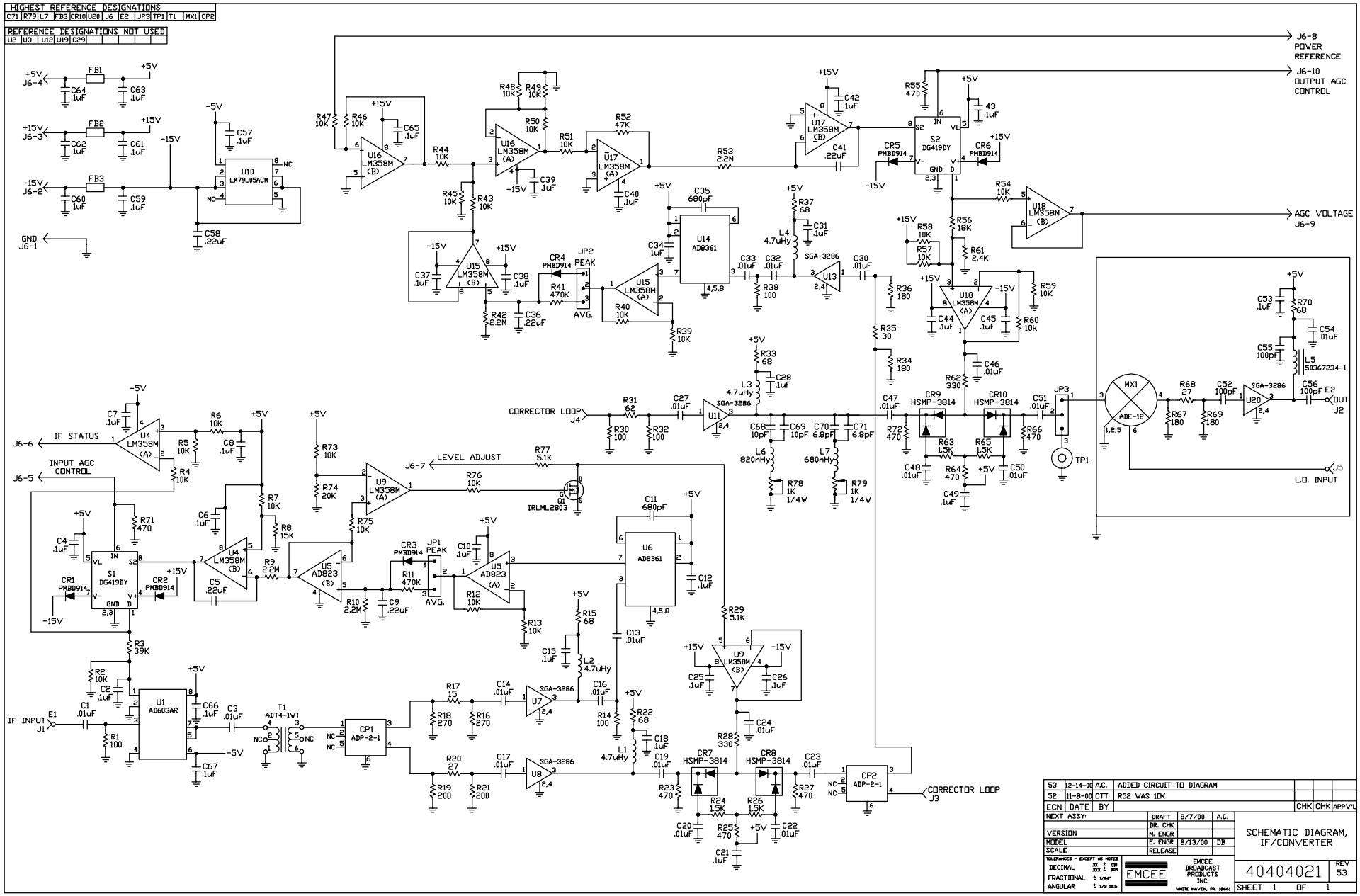
HIGHEST REFERENCE DESIGNATIONS
C71 R79 L7 FB3 CR10 U20 J6 E2 JP3 TP1 T1 MX1 CP2
REFERENCE DESIGNATIONS NOT USED
U2 U3 U12 U19 C29
J6-8 POWER REFERENCE
J6-10 OUTPUT AGC CONTROL
AGC VOLTAGE J6-9
CORRECTOR LOOP J4
CORRECTOR LOOP J3
IF STATUS J6-6
INPUT AGC CONTROL J6-5
LEVEL ADJUST J6-7
IF INPUT J1
OUT J2
L.O. INPUT J5
GND J6-1
U10 LM79L05ACM
U14 AD8361
U6 AD8361
U1 AD603AR
U5 AD823
U9 LM358M
U16 LM358M
U17 LM358M
U18 LM358M
U15 LM358M
U4 LM358M
S1 DG419DY
S2 DG419DY
MX1 ADE-12
CP1 ADP-2-1
CP2 ADP-2-1
T1 ADT4-1WT
Q1 IRLML2803
JP1 PEAK AVG.
JP2 PEAK AVG.
CR1 PMBD914
CR2 PMBD914
CR3 PMBD914
CR4 PMBD914
CR5 PMBD914
CR6 PMBD914
CR7 HSMP-3814
CR8 HSMP-3814
CR9 HSMP-3814
CR10 HSMP-3814
L5 50367234-1
TP1
JP3
53 12-14-00 A.C. ADDED CIRCUIT TO DIAGRAM
52 11-8-00 CTT R52 WAS 10K
ECN DATE BY CHK CHK APPV'L
NEXT ASSY: DRAFT 8/7/00 A.C.
DR. CHK
VERSION M. ENGR
MODEL E. ENGR 8/13/00 DB
SCALE RELEASE
TOLERANCES - EXCEPT AS NOTED
DECIMAL .XX ± .010 .XXX ± .005
FRACTIONAL ± 1/64"
ANGULAR ± 1/2 DEG
EMCEE
EMCEE BROADCAST PRODUCTS INC.
WHITE HAVEN, PA. 18661
SCHEMATIC DIAGRAM, IF/CONVERTER
40404021
REV 53
SHEET 1 OF 1

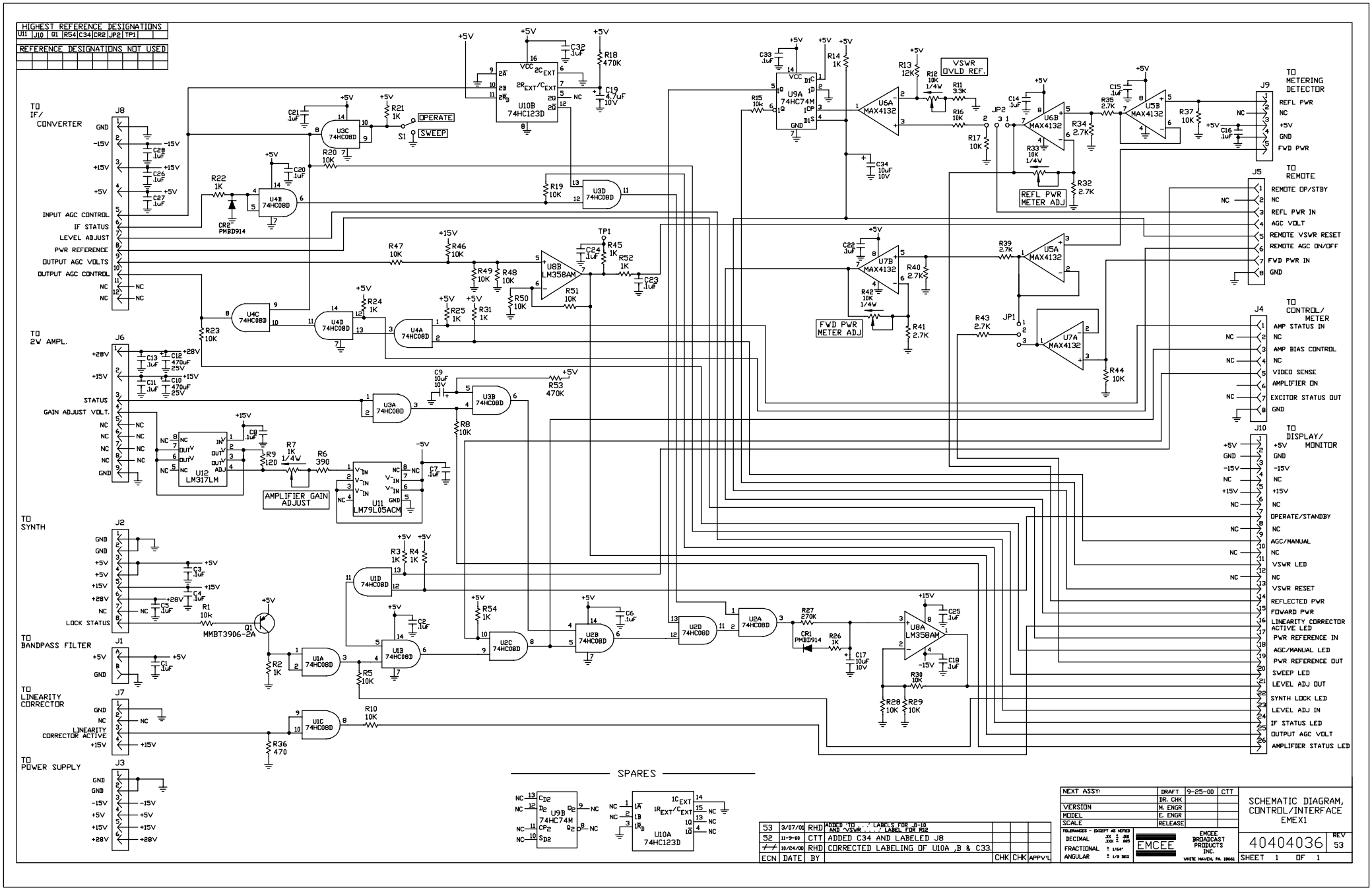
HIGHEST REFERENCE DESIGNATIONS
U11 J10 Q1 R54 C34 CR2 JP2 TP1
REFERENCE DESIGNATIONS NOT USED
TO IF/ CONVERTER
J8
INPUT AGC CONTROL
IF STATUS
LEVEL ADJUST
PWR REFERENCE
OUTPUT AGC VOLTS
OUTPUT AGC CONTROL
TO 2W AMPL.
J6
STATUS
GAIN ADJUST VOLT.
TO SYNTH
J2
LOCK STATUS
TO BANDPASS FILTER
J1
TO LINEARITY CORRECTOR
J7
LINEARITY CORRECTOR ACTIVE
TO POWER SUPPLY
J3
U10B 74HC123D
U9A 74HC74M
U6A MAX4132
U6B MAX4132
U5B MAX4132
U5A MAX4132
U7B MAX4132
U7A MAX4132
U8B LM358AM
U8A LM358AM
U12 LM317LM
U11 LM79L05ACM
U3C 74HC08D
U3D 74HC08D
U4B 74HC08D
U4C 74HC08D
U4D 74HC08D
U4A 74HC08D
U3A 74HC08D
U3B 74HC08D
U1D 74HC08D
U1A 74HC08D
U1B 74HC08D
U1C 74HC08D
U2A 74HC08D
U2B 74HC08D
U2C 74HC08D
U2D 74HC08D
Q1 MMBT3906-2A
CR2 PMBD914
CR1 PMBD914
OPERATE
SWEEP
S1
VSWR OVLD REF.
REFL PWR METER ADJ
FWD PWR METER ADJ
AMPLIFIER GAIN ADJUST
TP1
JP1
JP2
TO METERING DETECTOR
J9
REFL PWR
NC
+5V
GND
FWD PWR
TO REMOTE
J5
REMOTE OP/STBY
NC
REFL PWR IN
AGC VOLT
REMOTE VSWR RESET
REMOTE AGC ON/OFF
FWD PWR IN
GND
TO CONTROL/ METER
J4
AMP STATUS IN
NC
AMP BIAS CONTROL
NC
VIDEO SENSE
AMPLIFIER ON
EXCITOR STATUS OUT
GND
TO DISPLAY/ MONITOR
J10
+5V
GND
-15V
NC
+15V
NC
OPERATE/STANDBY
NC
AGC/MANUAL
NC
VSWR LED
NC
VSWR RESET
REFLECTED PWR
FOWARD PWR
LINEARITY CORRECTOR ACTIVE LED
PWR REFERENCE IN
AGC/MANUAL LED
PWR REFERENCE OUT
SWEEP LED
LEVEL ADJ OUT
SYNTH LOCK LED
LEVEL ADJ IN
IF STATUS LED
OUTPUT AGC VOLT
AMPLIFIER STATUS LED
SPARES
U9B 74HC74M
U10A 74HC123D
53 3/07/01 RHD ADDED 'TO . . .' LABELS FOR J1-10 AND 'VSWR . . .' LABEL FOR R12
52 11-9-00 CTT ADDED C34 AND LABELED J8
10/24/00 RHD CORRECTED LABELING OF U10A ,B & C33.
ECN DATE BY CHK CHK APPV'L
NEXT ASSY:
DRAFT 9-25-00 CTT
DR. CHK
VERSION M. ENGR
MODEL E. ENGR
SCALE RELEASE
TOLERANCES - EXCEPT AS NOTED
DECIMAL .XX ± .010 .XXX ± .005
FRACTIONAL ± 1/64"
ANGULAR ± 1/8 DEG
EMCEE
EMCEE BROADCAST PRODUCTS INC.
WHITE HAVEN, PA. 18661
SCHEMATIC DIAGRAM, CONTROL/INTERFACE EMEX1
40404036
REV 53
SHEET 1 OF 1

| HIGHEST REFERENCE DESIGNATIONS | | | | | | | | | |
|---|---|---|---|---|---|---|---|---|---|
| J3 | R1 | | | | | | | | |

| REFERENCE DESIGNATIONS NOT USED | | | | | | | | | |
|---|---|---|---|---|---|---|---|---|---|
| | | | | | | | | | |

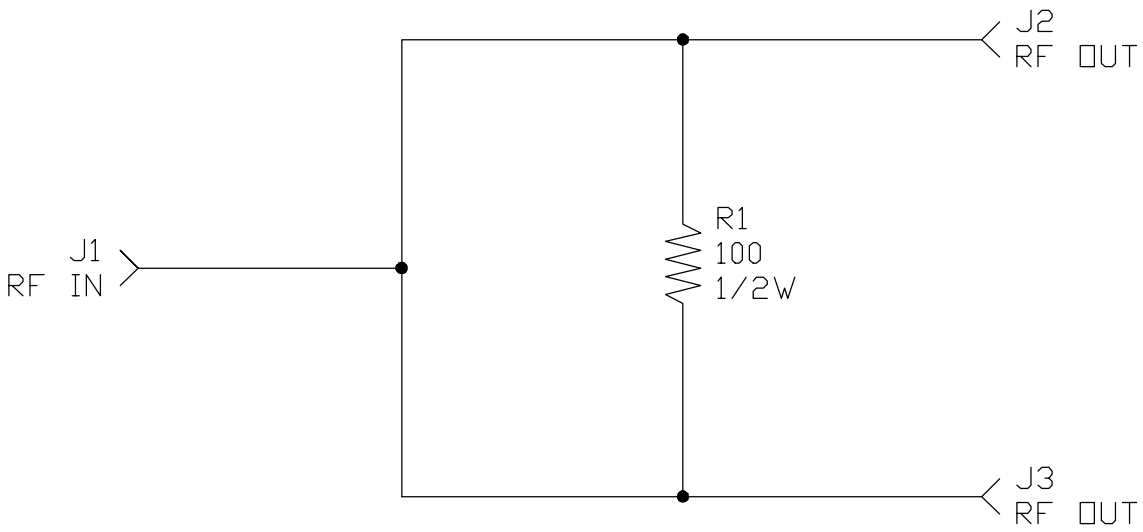


| ECN | DATE | BY | | CHK | CHK | APPV'L |
|---|---|---|---|---|---|---|
| | | | | | | |

| NEXT ASSY: | DRAFT | 6-28-99 | CTT |
|---|---|---|---|
| | DR. CHK | | |
| VERSION | M. ENGR | | |
| MODEL | E. ENGR | | |
| SCALE | RELEASE | | |

TOLERANCES - EXCEPT AS NOTED

| | |
|---|---|
| DECIMAL | .XX ± .010<br>.XXX ± .005 |
| FRACTIONAL | ± 1/64" |
| ANGULAR | ± 1/2 DEG |

EMCEE

EMCEE
BROADCAST
PRODUCTS
INC.
WHITE HAVEN, PA. 18661

# SCHEMATIC DIAGRAM, UHF SPLITTER

10394220

REV 51

SHEET 1 OF 1

| HIGHEST REFERENCE DESIGNATIONS | | | | | | | | | |
|---|---|---|---|---|---|---|---|---|---|
| J3 | R1 | | | | | | | | |

| REFERENCE DESIGNATIONS NOT USED | | | | | | | | | |
|---|---|---|---|---|---|---|---|---|---|
| | | | | | | | | | |

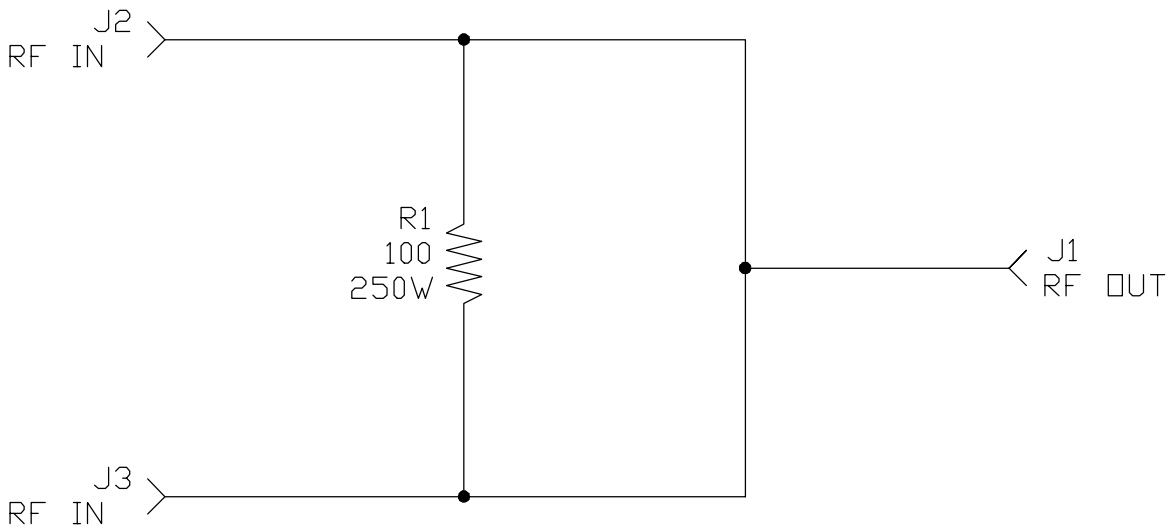


| ECN | DATE | BY | | CHK | CHK | APPV'L |
|---|---|---|---|---|---|---|
| NEXT ASSY: | | | DRAFT | 6-28-99 | CTT | |
| | | | DR. CHK | | | |
| VERSION | | | M. ENGR | | | |
| MODEL | | | E. ENGR | | | |
| SCALE | | | RELEASE | | | |

TOLERANCES - EXCEPT AS NOTED

| | |
|---|---|
| DECIMAL | .XX ± .010<br>.XXX ± .005 |
| FRACTIONAL | ± 1/64" |
| ANGULAR | ± 1/2 DEG |

EMCEE

EMCEE
BROADCAST
PRODUCTS
INC.
WHITE HAVEN, PA. 18661

# SCHEMATIC DIAGRAM, UHF COMBINER

10394221

REV 51

SHEET 1 OF 1

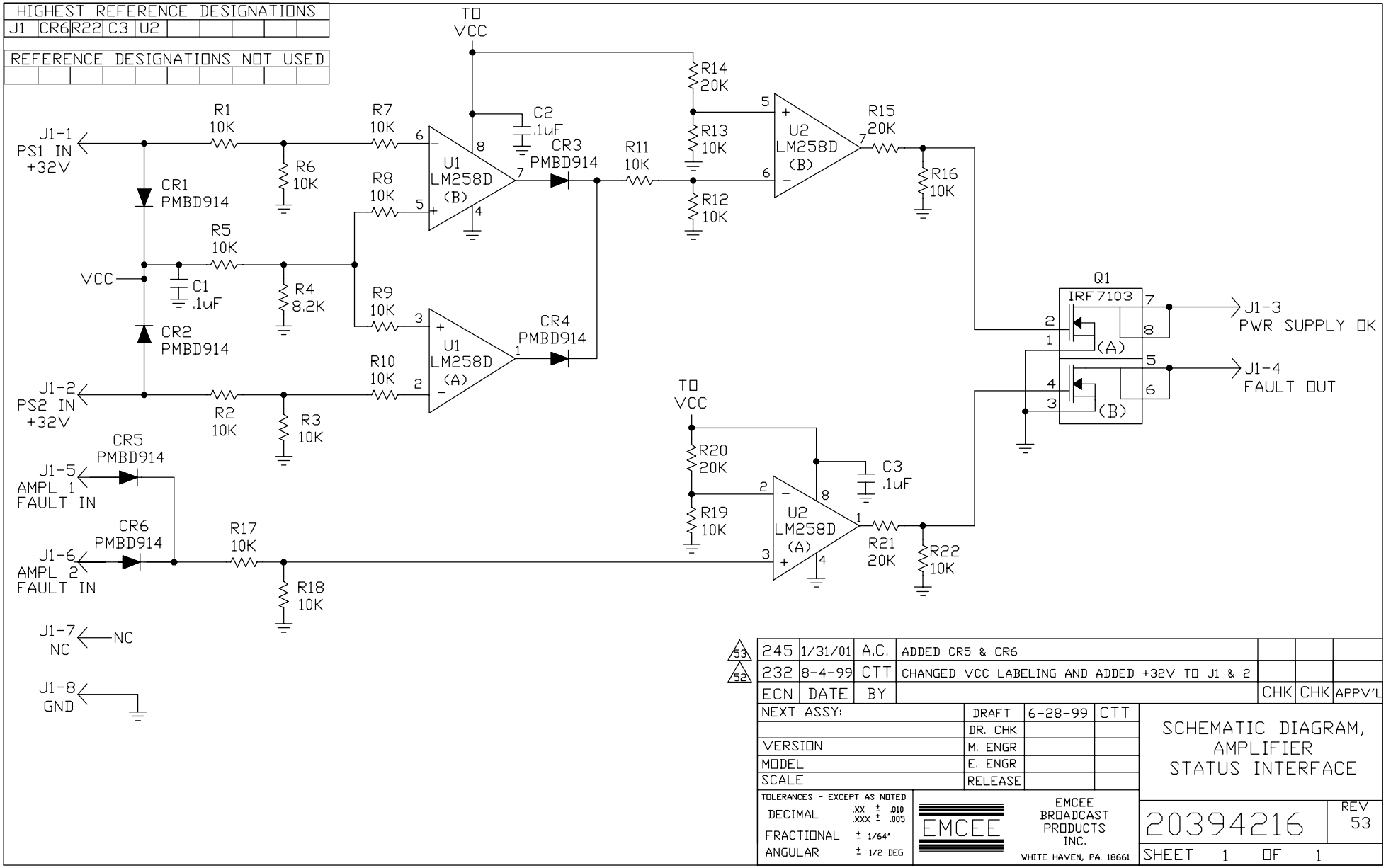


| ECN | DATE | BY | | CHK | CHK | APPV'L |
|---|---|---|---|---|---|---|
| 245 | 1/31/01 | A.C. | ADDED CR5 & CR6 | | | |
| 232 | 8-4-99 | CTT | CHANGED VCC LABELING AND ADDED +32V TO J1 & 2 | | | |

| | | | |
|---|---|---|---|
| NEXT ASSY: | DRAFT | 6-28-99 | CTT |
| | DR. CHK | | |
| VERSION | M. ENGR | | |
| MODEL | E. ENGR | | |
| SCALE | RELEASE | | |

TOLERANCES - EXCEPT AS NOTED
DECIMAL .XX ± .010 .XXX ± .005
FRACTIONAL ± 1/64"
ANGULAR ± 1/2 DEG

EMCEE BROADCAST PRODUCTS INC.
WHITE HAVEN, PA. 18661

# SCHEMATIC DIAGRAM, AMPLIFIER STATUS INTERFACE

20394216 REV 53

SHEET 1 OF 1

| HIGHEST REFERENCE DESIGNATIONS | | | | | | | | | |
|---|---|---|---|---|---|---|---|---|---|
| R21 | C4 | J1 | U2 | Q9 | | | | | |

| REFERENCE DESIGNATIONS NOT USED | | | | | | | | | |
|---|---|---|---|---|---|---|---|---|---|
| | | | | | | | | | |

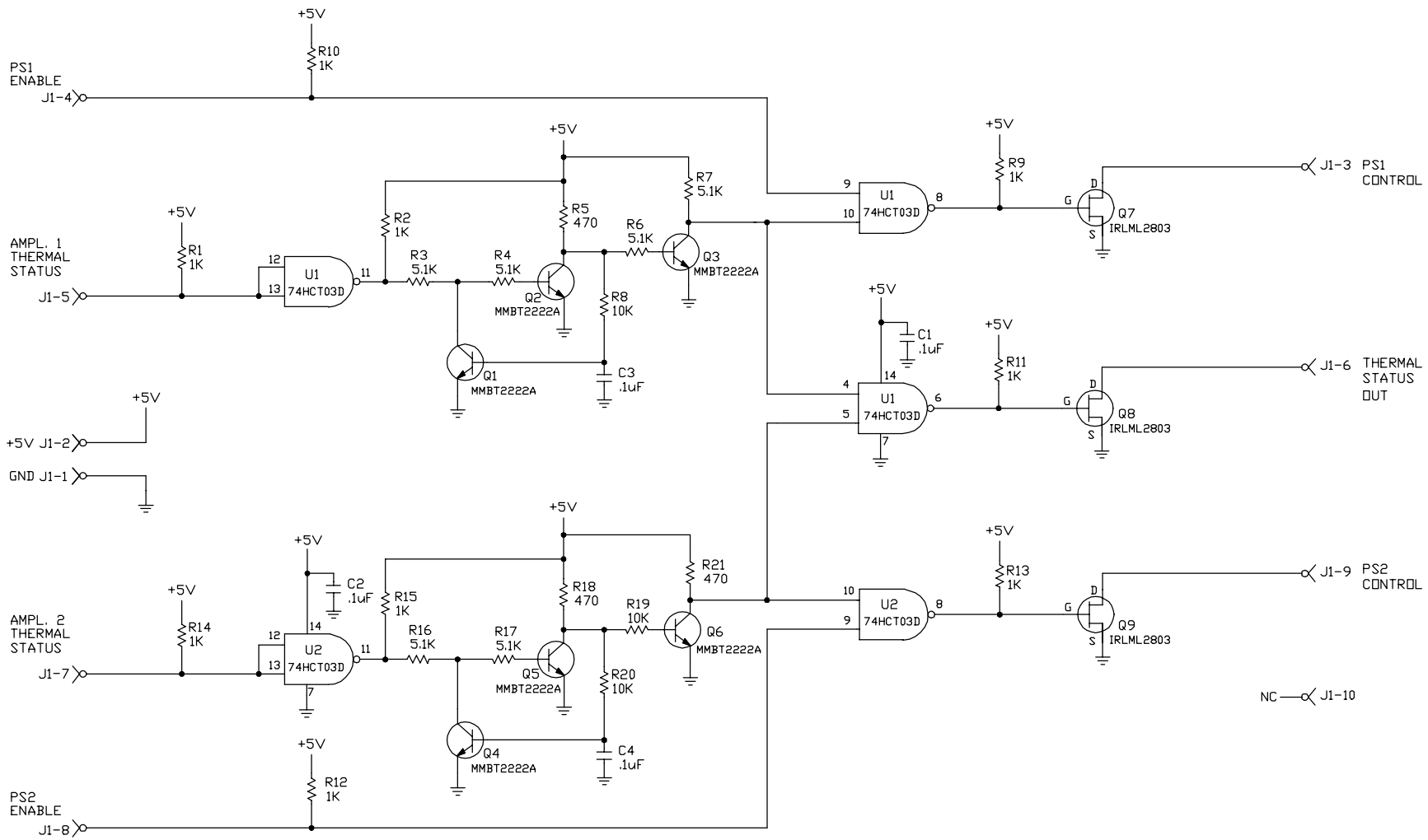


| ECN | DATE | BY | | CHK | CHK | APPV'L |
|---|---|---|---|---|---|---|
| 52 | 11-9-00 | CTT | ADDED C3, AND C4 | | | |

| | | | |
|---|---|---|---|
| NEXT ASSY: | DRAFT | 9/12/00 | A.C. |
| | DR. CHK | | |
| VERSION | M. ENGR | | |
| MODEL | E. ENGR | | |
| SCALE | RELEASE | | |

TOLERANCES - EXCEPT AS NOTED
DECIMAL .XX ± .010 .XXX ± .005
FRACTIONAL ± 1/64"
ANGULAR ± 1/2 DEG

EMCEE BROADCAST PRODUCTS INC.
WHITE HAVEN, PA. 18661

SCHEMATIC DIAGRAM, POWER SUPPLY THERMAL INTERFACE

30400055 REV 52

SHEET 1 OF 1

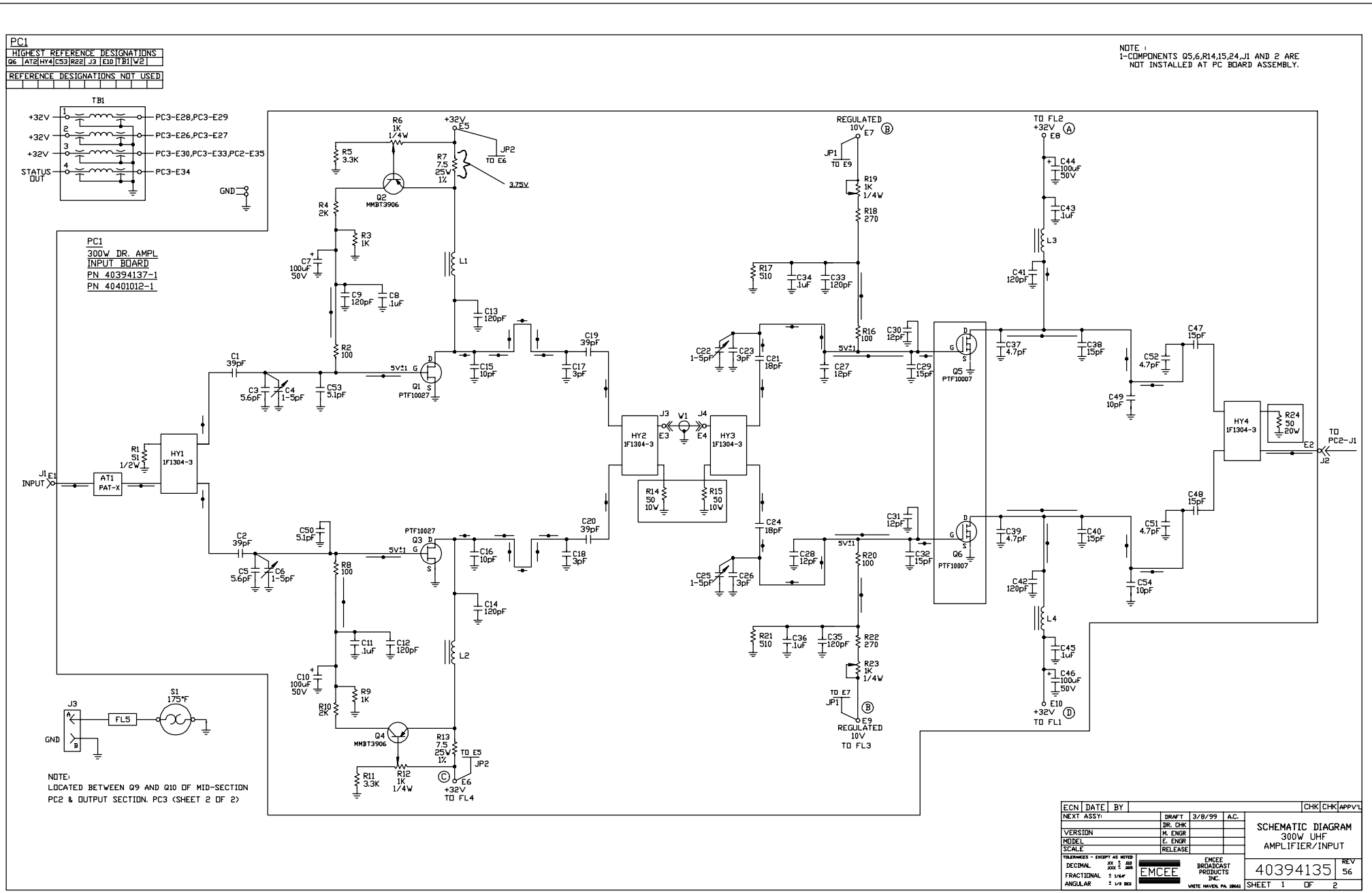
PC1
HIGHEST REFERENCE DESIGNATIONS
Q6 AT2 HY4 C53 R22 J3 E10 TB1 W2
REFERENCE DESIGNATIONS NOT USED
NOTE :
1-COMPONENTS Q5,6,R14,15,24,J1 AND 2 ARE NOT INSTALLED AT PC BOARD ASSEMBLY.
TB1
+32V PC3-E28,PC3-E29
+32V PC3-E26,PC3-E27
+32V PC3-E30,PC3-E33,PC2-E35
STATUS OUT PC3-E34
GND
PC1
300W DR. AMPL
INPUT BOARD
PN 40394137-1
PN 40401012-1
J1 INPUT E1
AT1 PAT-X
R1 51 1/2W
HY1 1F1304-3
C1 39pF
C3 5.6pF
C4 1-5pF
C53 5.1pF
R2 100
C2 39pF
C5 5.6pF
C6 1-5pF
C50 5.1pF
R8 100
R6 1K 1/4W
+32V E5
R5 3.3K
R7 7.5 25W 1%
JP2 TO E6
3.75V
Q2 MMBT3906
R4 2K
R3 1K
C7 100uF 50V
C9 120pF
C8 .1uF
L1
C13 120pF
C15 10pF
C19 39pF
C17 3pF
5V±1
Q1 PTF10027
PTF10027 Q3
C16 10pF
C18 3pF
C20 39pF
C14 120pF
C11 .1uF
C12 120pF
L2
C10 100uF 50V
R9 1K
R10 2K
Q4 MMBT3906
R13 7.5 25W 1%
TO E5
JP2
R11 3.3K
R12 1K 1/4W
E6
+32V
TO FL4
J3
FL5
S1 175*F
GND
NOTE:
LOCATED BETWEEN Q9 AND Q10 OF MID-SECTION PC2 & OUTPUT SECTION. PC3 (SHEET 2 OF 2)
HY2 1F1304-3
J3 E3
W1
J4 E4
HY3 1F1304-3
R14 50 10W
R15 50 10W
REGULATED 10V E7
JP1 TO E9
R19 1K 1/4W
R18 270
R17 510
C34 .1uF
C33 120pF
R16 100
C22 1-5pF
C23 3pF
C21 18pF
C27 12pF
C30 12pF
C29 15pF
Q5 PTF10007
C24 18pF
C25 1-5pF
C26 3pF
C28 12pF
C31 12pF
C32 15pF
Q6 PTF10007
R21 510
C36 .1uF
C35 120pF
R22 270
R23 1K 1/4W
TO E7
JP1
E9
REGULATED 10V
TO FL3
TO FL2 +32V E8
C44 100uF 50V
C43 .1uF
L3
C41 120pF
C37 4.7pF
C38 15pF
C47 15pF
C52 4.7pF
C49 10pF
C39 4.7pF
C40 15pF
C48 15pF
C51 4.7pF
C54 10pF
C42 120pF
L4
C45 .1uF
C46 100uF 50V
E10 +32V
TO FL1
HY4 1F1304-3
R24 50 20W
E2
TO PC2-J1
J2
ECN DATE BY
CHK CHK APPV'L
NEXT ASSY:
DRAFT 3/8/99 A.C.
DR. CHK
M. ENGR
E. ENGR
RELEASE
VERSION
MODEL
SCALE
TOLERANCES - EXCEPT AS NOTED
DECIMAL XX ± .03 XXX ± .005
FRACTIONAL ± 1/64
ANGULAR ± 1/2 DEG
EMCEE BROADCAST PRODUCTS INC.
WHITE HAVEN, PA 18661
SCHEMATIC DIAGRAM
300W UHF
AMPLIFIER/INPUT
40394135
REV 56
SHEET 1 OF 2

PC2, PC3

HIGHEST REFERENCE DESIGNATIONS

| U13 | E34 | L13 | TP10 | AT3 | R143 | C13 | C125 | HY4 | Q10 | Z8 | FL5 | JP10 | J5 |
|---|---|---|---|---|---|---|---|---|---|---|---|---|---|

REFERENCE DESIGNATIONS NOT USED

| C41 | R21 | | | | | | | | | | | | |
|---|---|---|---|---|---|---|---|---|---|---|---|---|---|

PC2
300W AMPL. MID-SECTION
PN 40394144-1
PN 40401014-1

PC3
300W AMPL. OUTPUT
PN 40394144-2
PN 40401014-2

J4 — AT3 LOAD 50 150W

NOTE:
LOAD AT3 IS FOR TTU2000HDS OPERATION ONLY.

FROM PC1-J2

SEE SHEET 1

NOTES:
1-TRANSISTORS Q7, Q8, Q9, Q10, RESISTORS R1, R2, R3, R139, CAPACITORS C6, C32, C59, C86, ATTENUATOR AT1, AT2 AND FL1-FL5 ARE NOT PART OF PCB ASSEMBLY.

SCHEMATIC DIAGRAM
300W UHF AMPLIFIER/OUTPUT

40394135 REV 56

SHEET 2 OF 2

| HIGHEST REFERENCE DESIGNATIONS | | | | | | | | | |
|---|---|---|---|---|---|---|---|---|---|
| J3 | U4 | CR2 | R16 | C14 | FB1 | JP2 | E2 | | |

| REFERENCE DESIGNATIONS NOT USED | | | | | | | | | |
|---|---|---|---|---|---|---|---|---|---|
| | | | | | | | | | |

NOTES :
1-COMPONENTS J1, 2, 3, ARE NOT LOCATED ON PC BOARD.
2-FOR ANALOG OPERATIONS SHUNT IS ON PINS 1 AND 2. FOR DIGITAL MOVE SHUNT TO PINS 2 AND 3, JP1,JP2. THIS IS TO BE DETERMINED BY THE TEST DEPT.

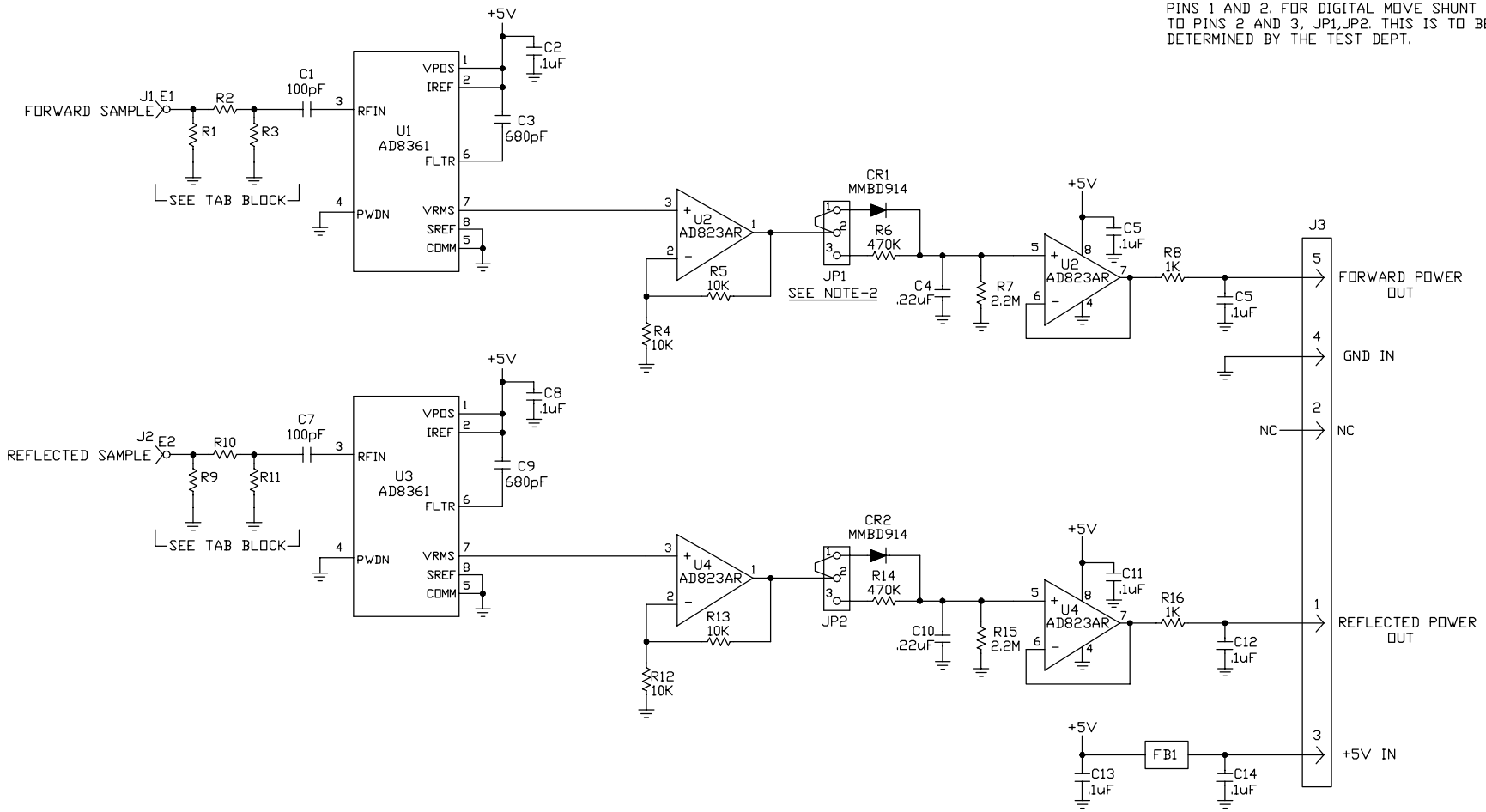


| TABULATION BLOCK | | |
|---|---|---|
| RESISTORS IN OHMS | 1KW | 2KW |
| R1, R9 | 68 | 390 |
| R2, R10 | 150 | 12 |
| R3, R11 | 33 | 75 |

| ECN | DATE | BY | | CHK | CHK | APPV'L |
|---|---|---|---|---|---|---|
| 53 | 11-9-00 | CTT | TAB BLOCK,1KW WAS 180,30,AND 68 | | | |
| 52 | 10/3/00 | RHD | RENUMBERED PINS OF J3 | | | |

| | | | |
|---|---|---|---|
| NEXT ASSY: | DRAFT | 7-13-00 | CTT |
| | DR. CHK | | |
| VERSION | M. ENGR | | |
| MODEL | E. ENGR | 7-20-00 | JMJ |
| SCALE | RELEASE | | |

TOLERANCES - EXCEPT AS NOTED
DECIMAL .XX ± .010 .XXX ± .005
FRACTIONAL ± 1/64"
ANGULAR ± 1/2 DEG

EMCEE BROADCAST PRODUCTS INC.
WHITE HAVEN, PA. 18661

# SCHEMATIC DIAGRAM, METERING DETECTOR

30400038 REV 53

SHEET 1 OF 1

NOTE:
1-MARK REV LEVEL PER SHEET 1 of 1 AND SPEC A232-107-3.
2-LED'S DS3, DS4, & DS11 ARE NOT USED FOR TTU500FA OPERATION.
3-CONNECT PIN 1 & PIN 2 FOR 500W AND PIN 2 & PIN 3 FOR 1000W.

PANEL SIDE OF PC BOARD

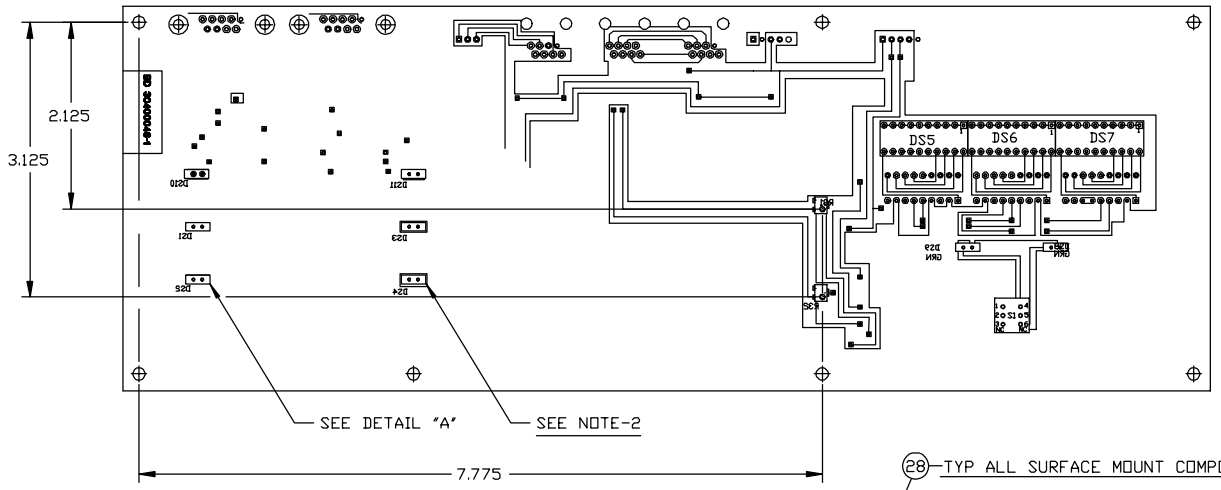


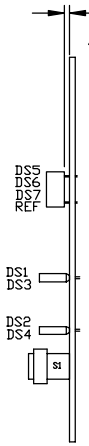


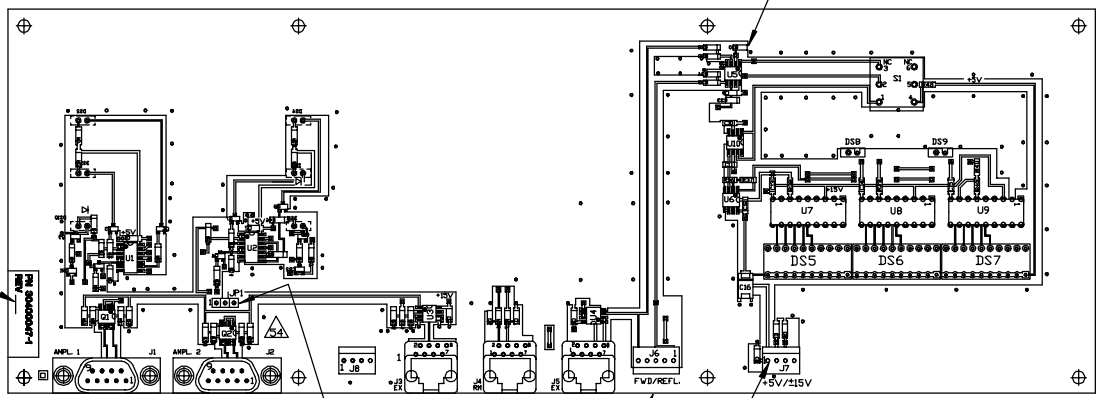


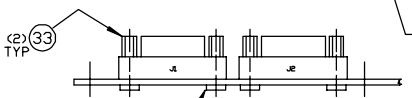


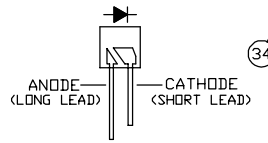


DETAIL-A
LED OREINTATION 53

1 TYP ALL HAND SOLDER COMPONENTS
27

REV 54 (-1) PCB ASSY, CONTROL MONITOR

REV 51 (-2) PCB ASSY, CONTROL MONITOR TTU500W
(CAN BE MADE FROM -1)

| ECN | DATE | BY | | CHK | CHK | APPV'L |
|---|---|---|---|---|---|---|
| -1 | 3-9-01 | A.C. | ADDED ITEM 37 AND -2, ALSO NOTE-2 & 3 | | | |
| 53 | 11-20-00 | CTT | ADDED DETAIL-A, DIM .062 WAS .112 | | | |
| 52 | 10-5-00 | CTT | ROTATED CONNECTORS J6,7,& 8 | | | |

| | | | | |
|---|---|---|---|---|
| NEXT ASSY: SEE DASH No. | DRAFT | 8-22-00 | CTT | PCB ASSEMBLY, CONTROL MONITOR |
| | DR. CHK | | | |
| VERSION | M. ENGR | | | |
| MODEL | E. ENGR | | | |
| SCALE 1=1 | RELEASE | | | |

TOLERANCES - EXCEPT AS NOTED
DECIMAL .XX ± .010 .XXX ± .005
FRACTIONAL ± 1/64"
ANGULAR ± 1/2 DEG

EMCEE BROADCAST PRODUCTS INC.
WHITE HAVEN, PA 18661

30400047 REV SEE DASH No.

SHEET 1 OF 1

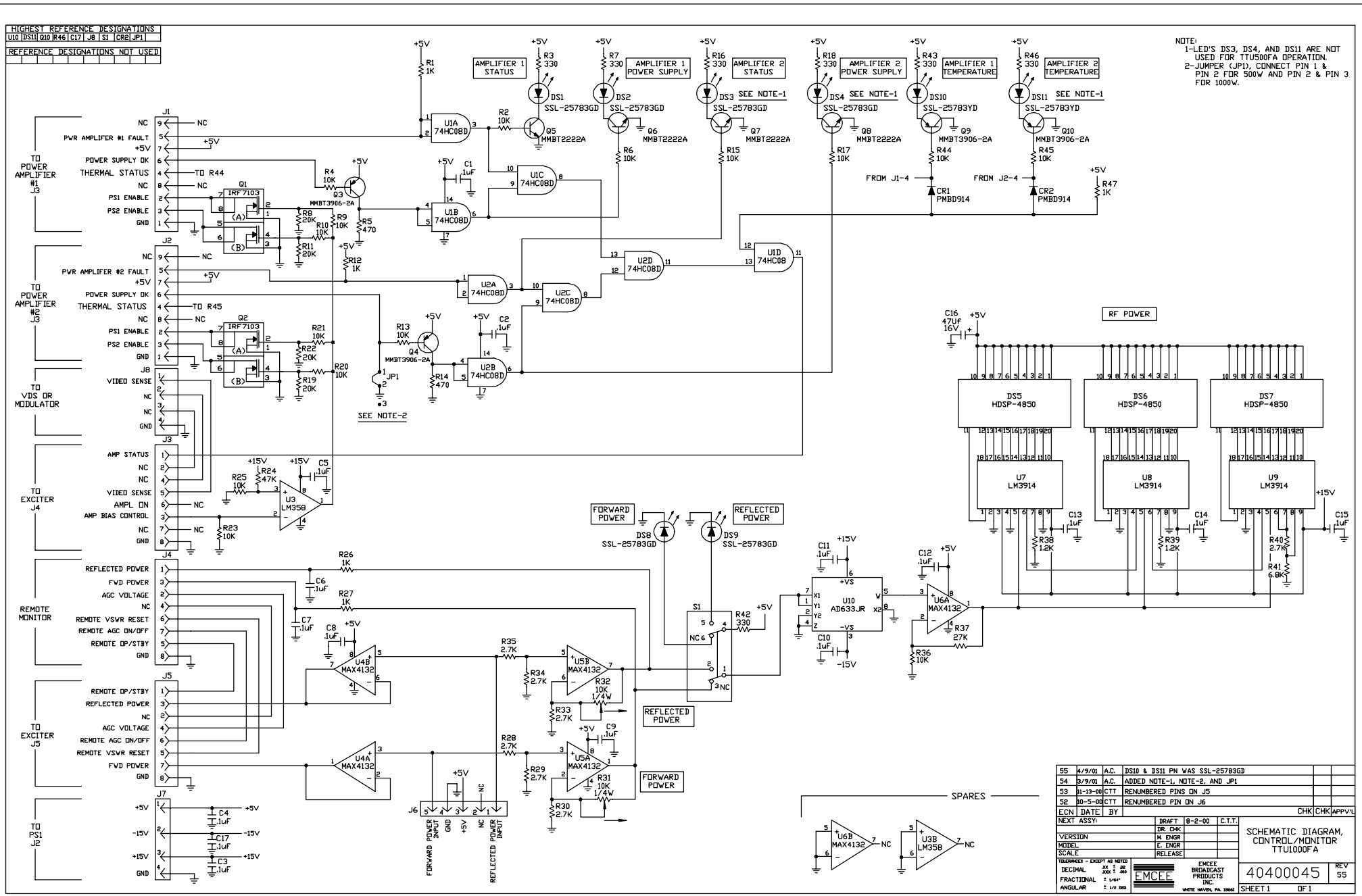
HIGHEST REFERENCE DESIGNATIONS
U10 DS11 Q10 R46 C17 J8 S1 CR2 JP1
REFERENCE DESIGNATIONS NOT USED
NOTE:
1-LED'S DS3, DS4, AND DS11 ARE NOT USED FOR TTU500FA OPERATION.
2-JUMPER (JP1), CONNECT PIN 1 & PIN 2 FOR 500W AND PIN 2 & PIN 3 FOR 1000W.
AMPLIFIER 1 STATUS
AMPLIFIER 1 POWER SUPPLY
AMPLIFIER 2 STATUS
AMPLIFIER 2 POWER SUPPLY
AMPLIFIER 1 TEMPERATURE
AMPLIFIER 2 TEMPERATURE
SEE NOTE-1
SEE NOTE-2
TO POWER AMPLIFIER #1 J3
TO POWER AMPLIFIER #2 J3
TO VDS OR MODULATOR
TO EXCITER J4
REMOTE MONITOR
TO EXCITER J5
TO PS1 J2
PWR AMPLIFER #1 FAULT
PWR AMPLIFER #2 FAULT
POWER SUPPLY OK
THERMAL STATUS
PS1 ENABLE
PS2 ENABLE
VIDEO SENSE
AMP STATUS
AMPL ON
AMP BIAS CONTROL
REFLECTED POWER
FWD POWER
AGC VOLTAGE
REMOTE OP/STBY
REMOTE AGC ON/OFF
REMOTE VSWR RESET
RF POWER
FORWARD POWER
REFLECTED POWER
SPARES
U1A 74HC08D
U1B 74HC08D
U1C 74HC08D
U1D 74HC08
U2A 74HC08D
U2B 74HC08D
U2C 74HC08D
U2D 74HC08D
U3 LM358
U4A MAX4132
U4B MAX4132
U5A MAX4132
U5B MAX4132
U6A MAX4132
U6B MAX4132
U7 LM3914
U8 LM3914
U9 LM3914
U10 AD633JR
DS1 SSL-25783GD
DS2 SSL-25783GD
DS3 SSL-25783GD
DS4 SSL-25783GD
DS5 HDSP-4850
DS6 HDSP-4850
DS7 HDSP-4850
DS8 SSL-25783GD
DS9 SSL-25783GD
DS10 SSL-25783YD
DS11 SSL-25783YD
Q1 IRF7103
Q2 IRF7103
Q3 MMBT3906-2A
Q4 MMBT3906-2A
Q5 MMBT2222A
Q6 MMBT2222A
Q7 MMBT2222A
Q8 MMBT2222A
Q9 MMBT3906-2A
Q10 MMBT3906-2A
CR1 PMBD914
CR2 PMBD914
FROM J1-4
FROM J2-4
55 4/9/01 A.C. DS10 & DS11 PN WAS SSL-25783GD
54 3/9/01 A.C. ADDED NOTE-1, NOTE-2, AND JP1
53 11-13-00 CTT Rrenumbered PINS ON J5
52 10-5-00 CTT RENUMBERED PIN ON J6
ECN DATE BY CHK CHK APPV'L
NEXT ASSY: DRAFT 8-2-00 C.T.T.
DR. CHK
VERSION M. ENGR
MODEL E. ENGR
SCALE RELEASE
TOLERANCES - EXCEPT AS NOTED
DECIMAL .XX ± .02 .XXX ± .010
FRACTIONAL ± 1/64"
ANGULAR ± 1/2 DEG
EMCEE
EMCEE BROADCAST PRODUCTS INC.
WHITE HAVEN, PA 18661
SCHEMATIC DIAGRAM, CONTROL/MONITOR TTU1000FA
40400045
REV 55
SHEET 1 OF 1