Exhibit B Schematic Diagram
Model # EL23/R25
FCC ID: BLD23ELA-1

| REVISION RECORD | | | |
|---|---|---|---|
| DATE | APPROVED | ECO NO | REV |
| 11FEB98 | D.KACHMARIK | L175-49E | 5.3 |
| 6-16-98 | L R NERONE | L175-94E | 6 |
| 7-10-98 | L R NERONE | L176-04E | A |

| REVISION RECORD | | | |
|---|---|---|---|
| DATE | APPROVED | ECO NO | REV |
| 26MAR97 | D.KACHMARIK | L174-32E | 1 |
| 30APR97 | S.VAMVAKAS | L174-58E | 2 |
| 23JUL97 | J.MORGAN | L174-90E | 3 |
| 13AUG97 | D.KACHMARIK | L175-09E | 4 |
| 29AUG97 | D.KACHMARIK | L175-12E | 5 |
| 20OCT97 | D.KACHMARIK | L175-24E | 5.1 |
| 10DEC97 | D.KACHMARIK | L175-38E | 5.2 |

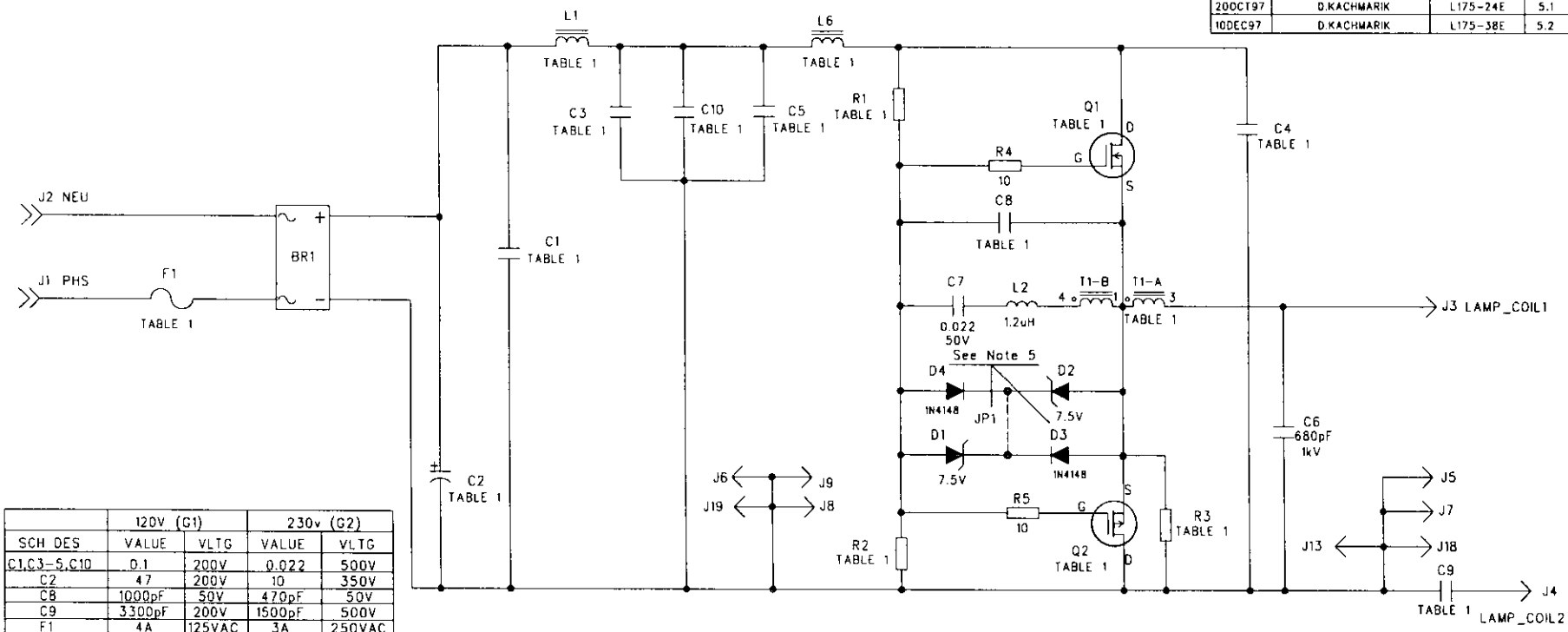


| | 120V (G1) | | 230v (G2) | |
|---|---|---|---|---|
| SCH DES | VALUE | VLTG | VALUE | VLTG |
| C1,C3-5,C10 | 0.1 | 200V | 0.022 | 500V |
| C2 | 47 | 200V | 10 | 350V |
| C8 | 1000pF | 50V | 470pF | 50V |
| C9 | 3300pF | 200V | 1500pF | 500V |
| F1 | 4A | 125VAC | 3A | 250VAC |
| L1 | 100uH | N/A | 150uH | N/A |
| L6 | 100uH | N/A | 220uH | N/A |
| Q1 | IRFR214 | N/A | IRFR310 | N/A |
| Q2 | IRFR9214 | N/A | IRFR9310 | N/A |
| R1,2,3 | 200K | N/A | 560K | N/A |

LAST # USED:
C10 J19 R3
D4 L4 T1
Q2 BR2

# NOT USED:
J11 J12
I3,L4,L5

NOTES -UNLESS OTHERWISE SPECIFIED:
1. CAPACITORS ARE IN MICROFARADS, 500V, 10%.
2. RESISTORS ARE IN OHMS, 0.1W, 5%.
3. THIS DRAWING USED IN CONJUNCTION WITH ASSEMBLY 24C522957
4. J5,J6,J7,J8,J9,J13,J14,J15,J16,J17,J18,J19 CONNECT TO THE SHIELD
5. JP1 INSTALLED FOR 230V ONLY. D3, D4 INSTALLED FOR 120V ONLY.

| | | |
|---|---|---|
| DRAWN S.BENEDICT | DATED 06MAR97 | GE Lighting — GENERAL ELECTRIC COMPANY Cleveland, OH |
| CHECKED H.CHANDRA | DATED 24MAR97 | SCHEMATIC DIAGRAM- 23W BALLAST, L-COMPLEMENTARY ELECTRODELESS FL 120/230V |
| ENGRG H.CHANDRA | DATED 05MAR97 | |
| ISSUED H.CHANDRA | DATED 24MAR97 | |
| PRELIMINARY | SIZE B | CAGE CODE |
| PROPRIETARY | DWG.NO. 24B522954 | REV A |
| | SCALE | SHEET 1 OF 1 |