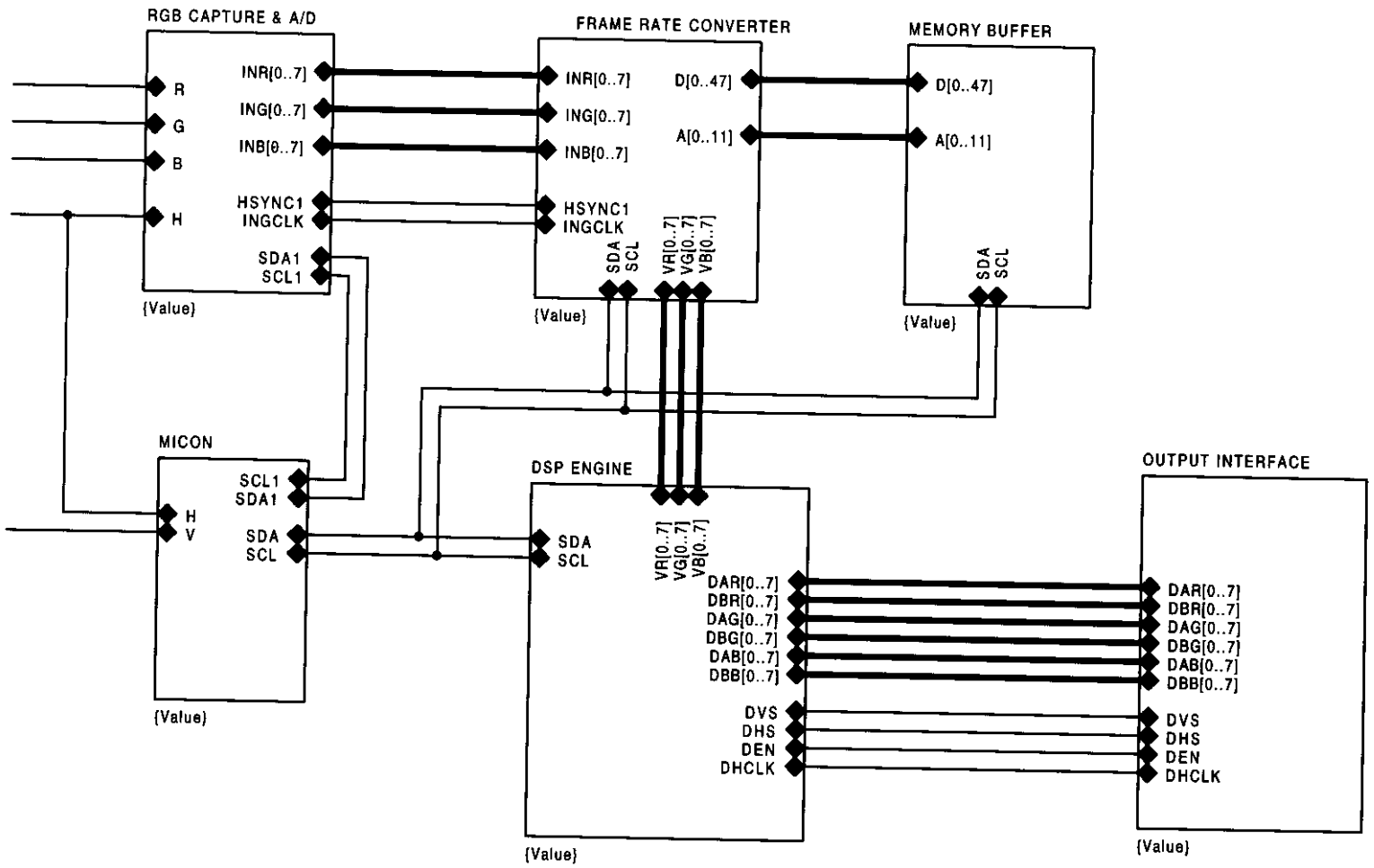

Title	**L4K Hierarchy**	
Size A	Document Number {Doc}	Rev 1
Date: Tuesday, November 03, 1998	Sheet 1 of 1	

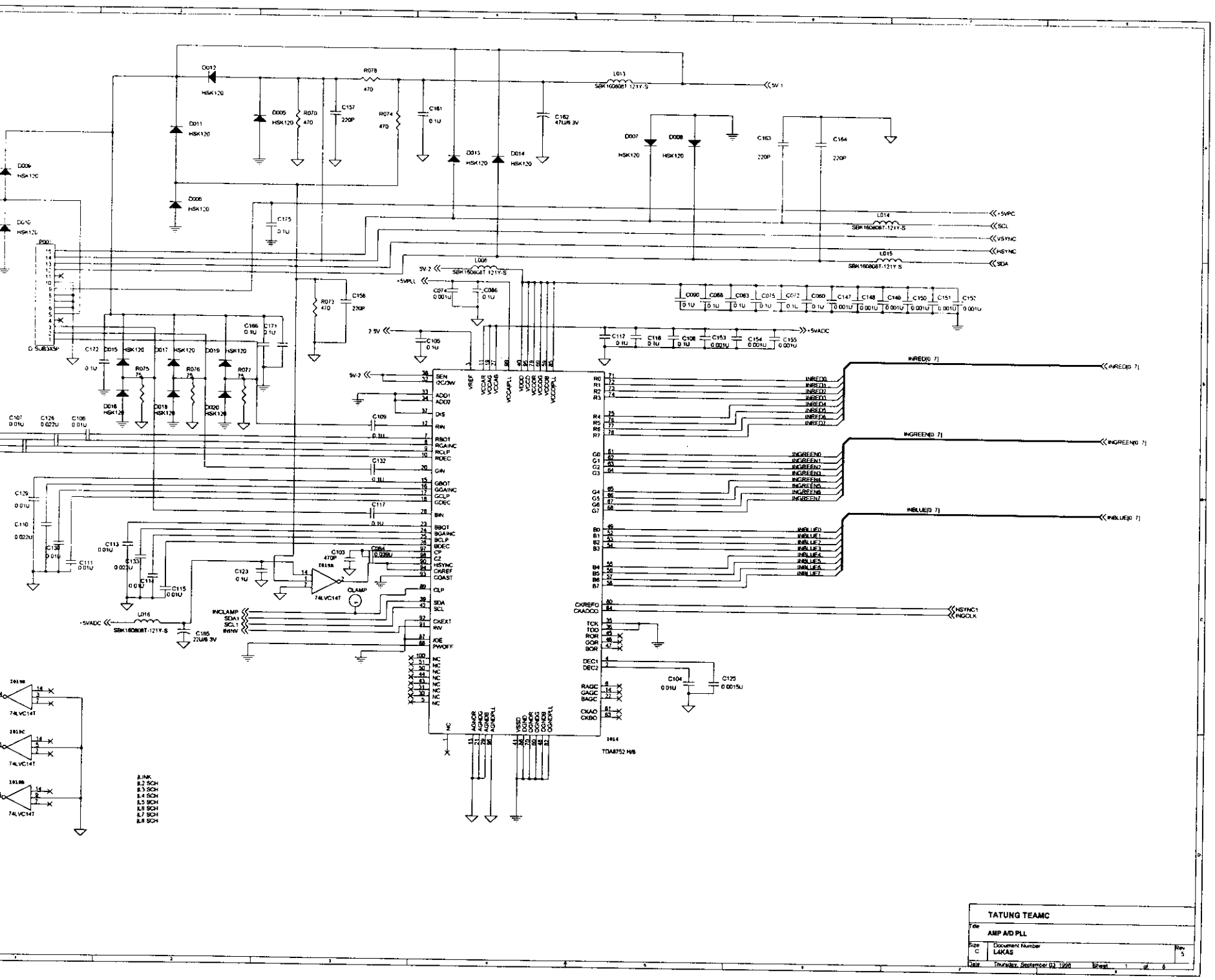

	TATUNG TEAMIC
Title	AMP A/D PLL
Size C	Document Number L4KA5 Rev 5
Date: Thursday, September 03, 1998	Sheet 1 of 6

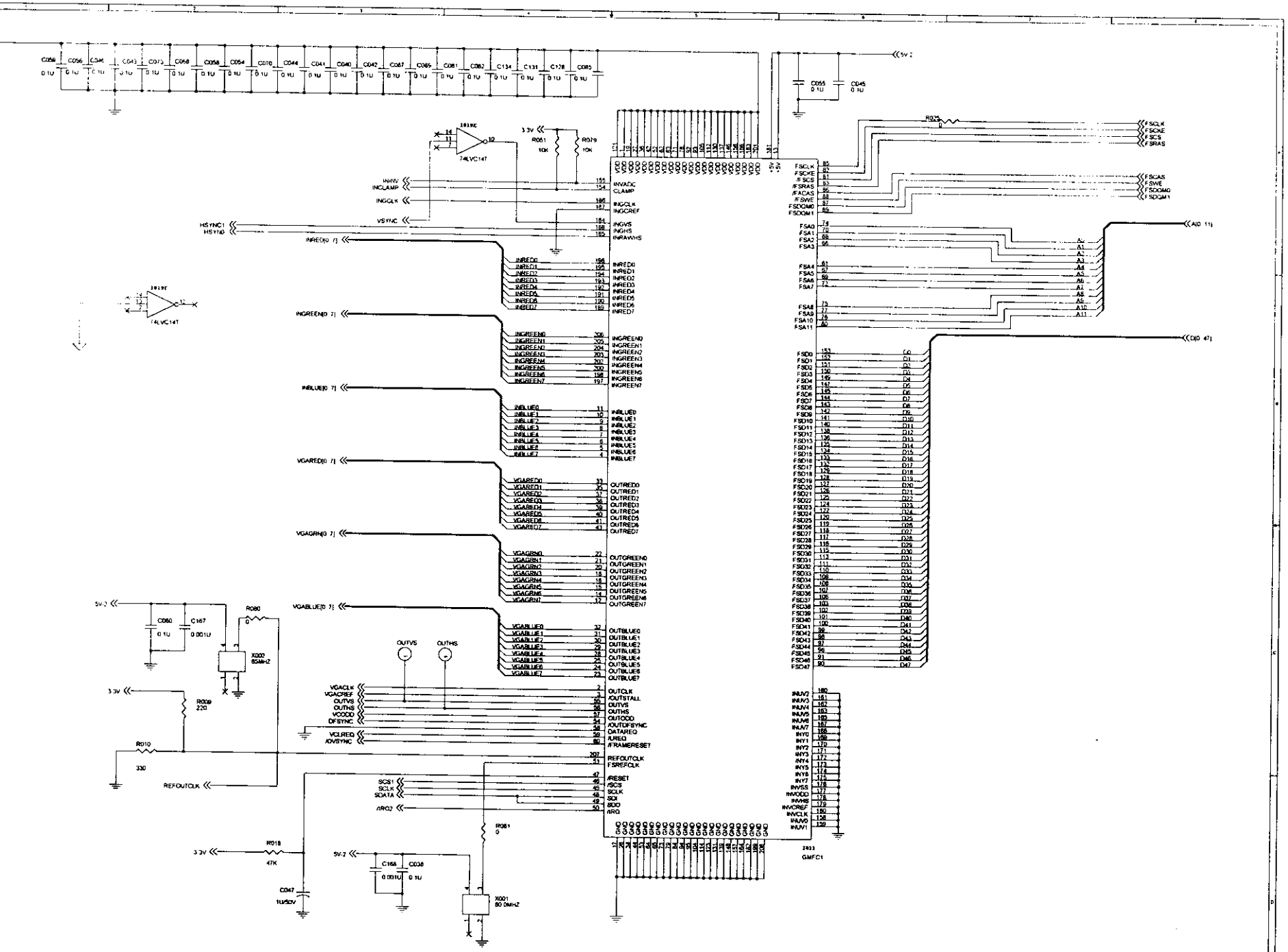
C056 C046 C043 C075 C068 C058 C054 C070 C044 C041 C040 C042 C087 C085 C081 C082 C134 C131 C128 C085
0.1U
5V-2
C055 0.1U
C045 0.1U
R025 0
FSCLK
FSCKE
FSCS
FSRAS
FSCAS
FSWE
FSDQM0
FSDQM1
FSA0
FSA1
FSA2
FSA3
FSA4
FSA5
FSA6
FSA7
FSA8
FSA9
FSA10
FSA11
A0 11
D0 47
FSD0
FSD1
FSD2
FSD3
FSD4
FSD5
FSD6
FSD7
FSD8
FSD9
FSD10
FSD11
FSD12
FSD13
FSD14
FSD15
FSD16
FSD17
FSD18
FSD19
FSD20
FSD21
FSD22
FSD23
FSD24
FSD25
FSD26
FSD27
FSD28
FSD29
FSD30
FSD31
FSD32
FSD33
FSD34
FSD35
FSD36
FSD37
FSD38
FSD39
FSD40
FSD41
FSD42
FSD43
FSD44
FSD45
FSD46
FSD47
74LVC14T
3.3V
R051 10K
R079 10K
INVV
INCLAMP
INGCLK
VSYNC
HSYNC1
HSYNC0
INRED0 7
INGREEN0 7
INBLUE0 7
VGARED0 7
VGAGRN0 7
VGABLUE0 7
INVADC
CLAMP
INGCLK
INGCREF
INGVS
INGHS
INRAWHS
INRED0
INRED1
INRED2
INRED3
INRED4
INRED5
INRED6
INRED7
INGREEN0
INGREEN1
INGREEN2
INGREEN3
INGREEN4
INGREEN5
INGREEN6
INGREEN7
INBLUE0
INBLUE1
INBLUE2
INBLUE3
INBLUE4
INBLUE5
INBLUE6
INBLUE7
OUTRED0
OUTRED1
OUTRED2
OUTRED3
OUTRED4
OUTRED5
OUTRED6
OUTRED7
OUTGREEN0
OUTGREEN1
OUTGREEN2
OUTGREEN3
OUTGREEN4
OUTGREEN5
OUTGREEN6
OUTGREEN7
OUTBLUE0
OUTBLUE1
OUTBLUE2
OUTBLUE3
OUTBLUE4
OUTBLUE5
OUTBLUE6
OUTBLUE7
OUTVS
OUTHS
VGACLK
VGACREF
OUTVS
OUTHS
VCODD
DFSYNC
VCLREQ
AOVSYNC
OUTCLK
AOUTSTALL
OUTVS
OUTHS
OUTODD
AOUTDFSYNC
DATAREQ
AUREQ
AFRAMERESET
REFOUTCLK
FSREFCLK
/RESET
/SCS
SCLK
SDI
SDO
ARQ
SCS1
SCLK
SDATA
/ARQ2
INUV2
INUV3
INUV4
INUV5
INUV6
INUV7
INY0
INY1
INY2
INY3
INY4
INY5
INY6
INY7
INVSS
INVDDD
INVHS
INVCREF
INVCLK
INUV0
INUV1
2933
GMFC1
C060 0.1U
C167 0.001U
R080 0
X002 85MHZ
R009 220
R010 330
REFOUTCLK
R018 47K
C047 10/50V
C165 0.001U
C038 0.1U
X001 80.0MHZ
R081 0
TATUNG TEAMC
Title
FRAME RATE CONVERTER gmFC1
Size C
Document Number L4KAS
Rev 5
Date Thursday, September 03, 1998
Sheet 2 of 5

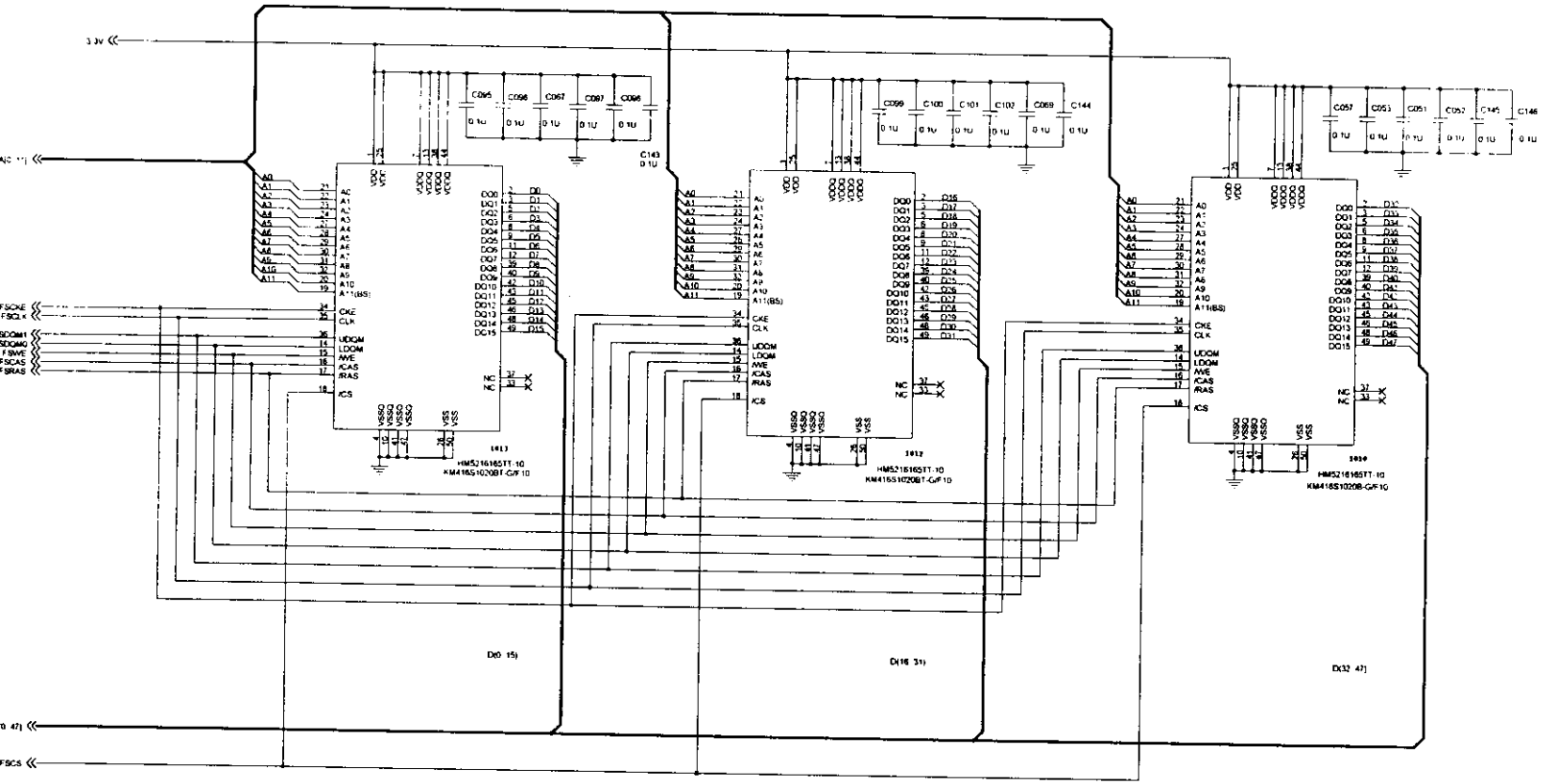

	TATUNG TEAMC
Title	SDRAM FOR GMFC1
Size C	Document Number L4KAS
Rev	5
Date	Tuesday, September 01, 1998
Sheet	3 of 8

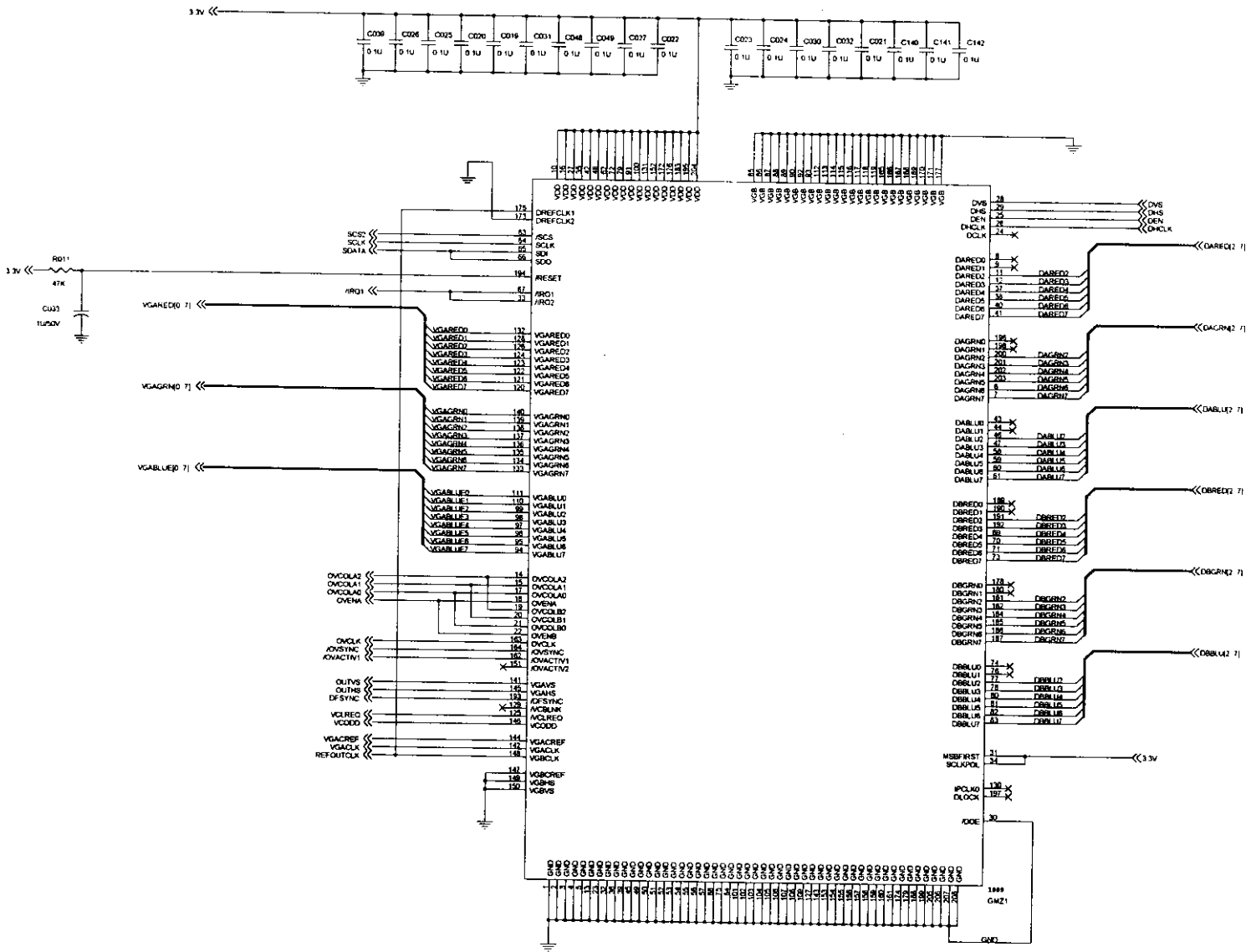

TATUNG TEAMC	
Title: ZOOM SCALER gmZ1	
Size: C	Document Number: L4KAS	Rev: 5
Date: Tuesday, September 01, 1998	Sheet 4 of 8

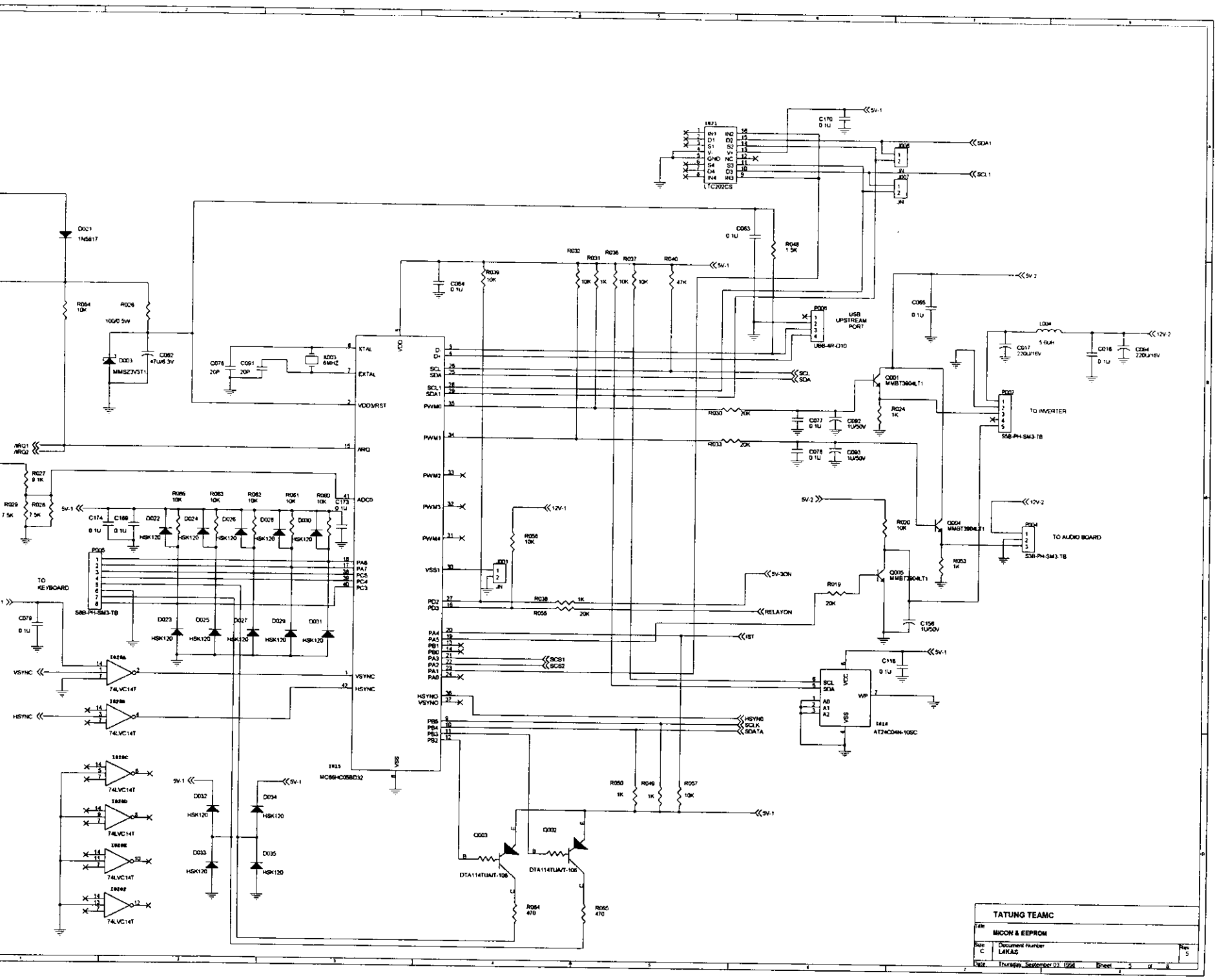
TATUNG TEAMC
MICON & EEPROM
L4KAS
Thursday, September 03, 1998
TO KEYBOARD
TO INVERTER
TO AUDIO BOARD
USB UPSTREAM PORT
MC68HC05B32
TC202CS
AT24C04N-10SC
74LVC14T
DTA114TUA/T-108
MMBT3904LT1
MMSZ3V3T1
1N5817
USB-4R-D10
58B-PH-SM3-TB
53B-PH-SM3-TB
5V-1
5V-2
12V-1
12V-2
5V-3ON
RELAYON
IST
SCS1
SCS2
HSYNC
VSYNC
SDA1
SCL1
SDA
SCL
SCLK
SDATA
ARQ1
ARQ2
XTAL
EXTAL
VDD/RST
ARQ
ADCD
PWM0
PWM1
PWM2
PWM3
PWM4
VSS1
PA6
PA7
PC5
PC4
PC3
PD2
PD3
PA4
PA5
PB1
PB0
PA3
PA2
PA1
PA0
PB5
PB4
PB3
PB2
VDD
VSS
D+
D-
SCL
SDA
SCL1
SDA1
X003
6MHZ
C076
20P
C091
20P
C082
47U/6.3V
C170
0.1U
C063
0.1U
C084
0.1U
C065
0.1U
C017
220U/16V
C018
0.1U
C064
220U/16V
L004
5.6UH
C077
0.1U
C092
1U/50V
C078
0.1U
C093
1U/50V
C156
1U/50V
C118
0.1U
C174
0.1U
C160
0.1U
C173
0.1U
C079
0.1U
R048
1.5K
R039
10K
R032
10K
R031
1K
R036
10K
R037
10K
R040
47K
R064
10K
R026
100/0.5W
R027
8.1K
R029
7.5K
R028
7.5K
R086
10K
R083
10K
R082
10K
R061
10K
R060
10K
R056
10K
R038
1K
R055
20K
R030
20K
R033
20K
R024
1K
R020
10K
R053
1K
R019
20K
R050
1K
R049
1K
R057
10K
R054
470
R065
470
D021
D003
D022
D024
D026
D028
D030
D023
D025
D027
D029
D031
D032
D033
D034
D035
HSK120
Q001
Q004
Q005
Q002
Q003
P005
P006
P007
P004
J001
J006
J007
IC01
IC15
IC14
IC20A
IC20B
IC20C
IC20D
IC20E
IC20F

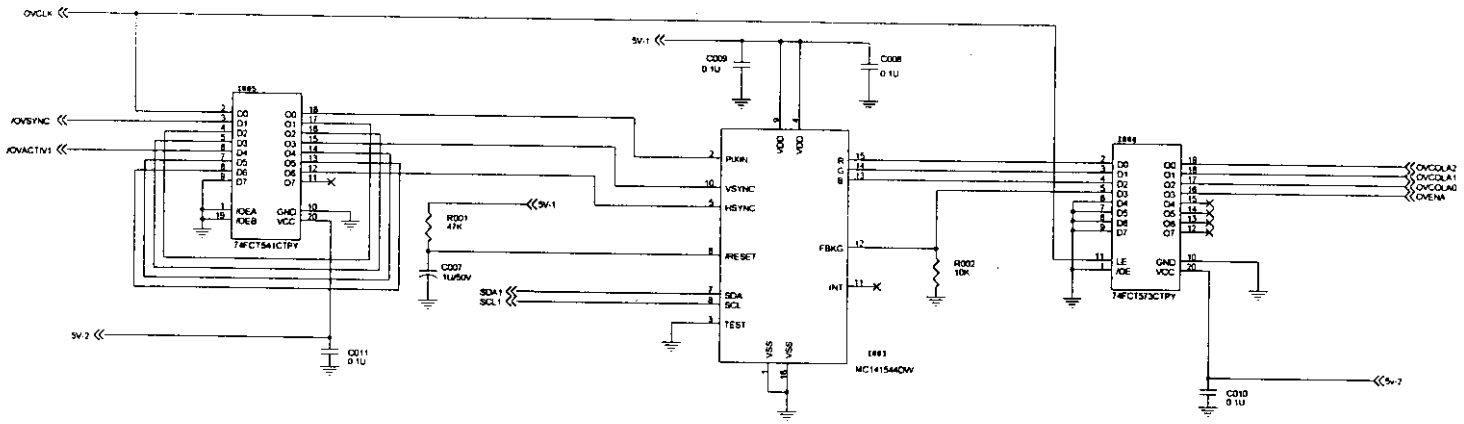

	TATUNG TEAMC
Title	OSD
Size C	Document Number L4KAS
Rev 3	
Date	Tuesday, September 01, 1998
Sheet	6 of 8

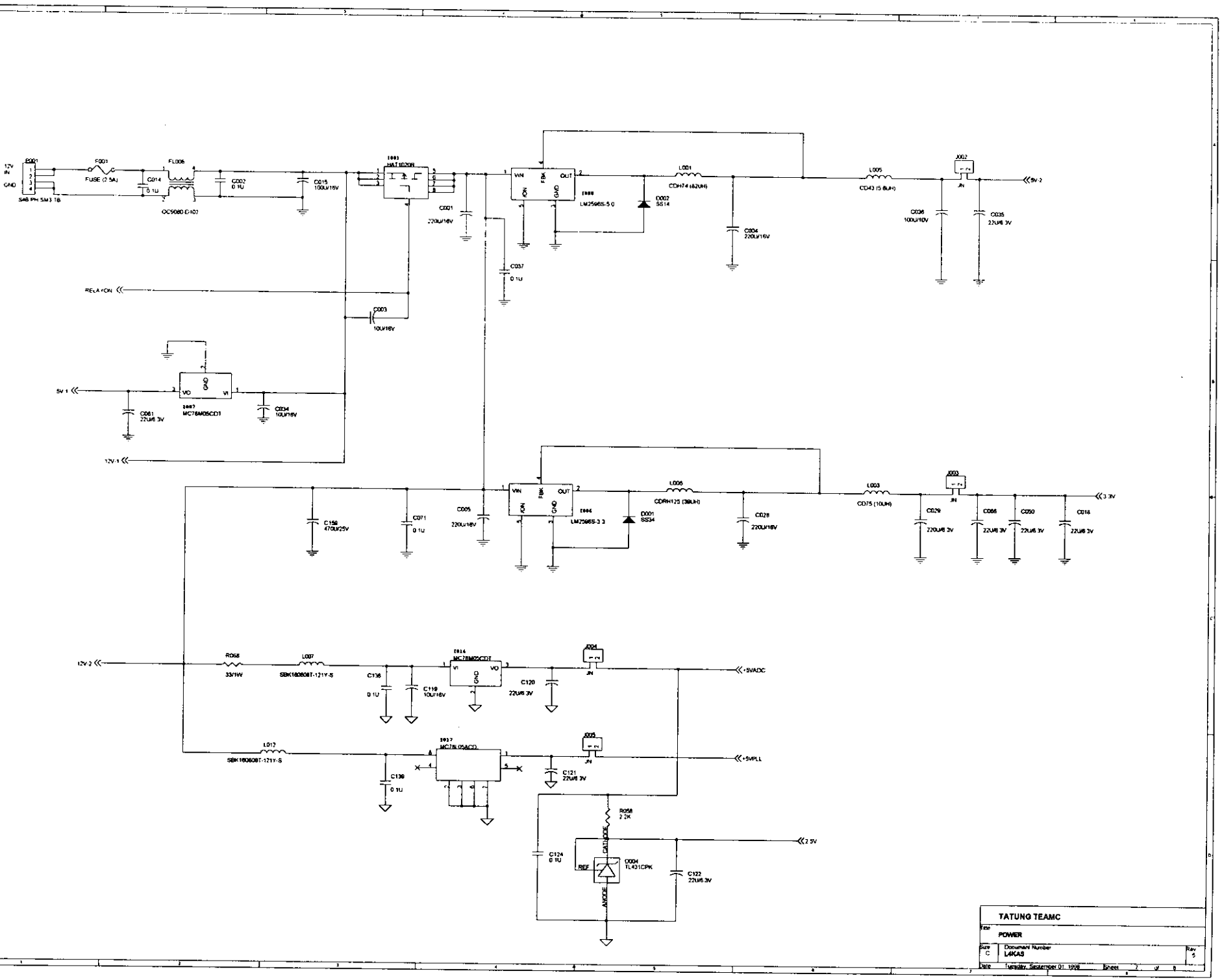
12V IN
GND
P001
S46 PH SM3 TB
F001
FUSE (2.5A)
C014
0.1U
FL006
OC9080-D-H02
C002
0.1U
C015
100U/16V
HAT1020R
C001
220U/16V
C037
0.1U
VIN
FBK
OUT
ON
GND
LM2596S-5.0
D002
SS14
L001
CDH74 (82UH)
C004
220U/16V
L005
CD43 (5.6UH)
J002
JN
5V-2
C036
100U/10V
C035
22U/6.3V
RELAY-ON
C003
10U/16V
5V-1
VO
VI
MC78M05CDT
C061
22U/6.3V
C034
10U/16V
12V-1
C158
470U/25V
C071
0.1U
C005
220U/16V
LM2596S-3.3
D001
SS34
L006
CDRH125 (39UH)
C028
220U/16V
L003
CD75 (10UH)
J003
3.3V
C029
220U/6.3V
C066
22U/6.3V
C050
22U/6.3V
C016
22U/6.3V
12V-2
R056
33/1W
L007
SBK160808T-121Y-S
C138
0.1U
C119
10U/16V
MC78M05CDT
C120
22U/6.3V
J004
+5VADC
L012
SBK160808T-121Y-S
MC78L05ACD
C139
0.1U
C121
22U/6.3V
J005
+5VPLL
R058
2.2K
CATHODE
REF
ANODE
D004
TL431CPK
C124
0.1U
C122
22U/6.3V
2.5V
TATUNG TEAMC
POWER
Size
C
Document Number
L4KA5
Rev
5
Date
Tuesday, September 01, 1998
Sheet
7
of
8

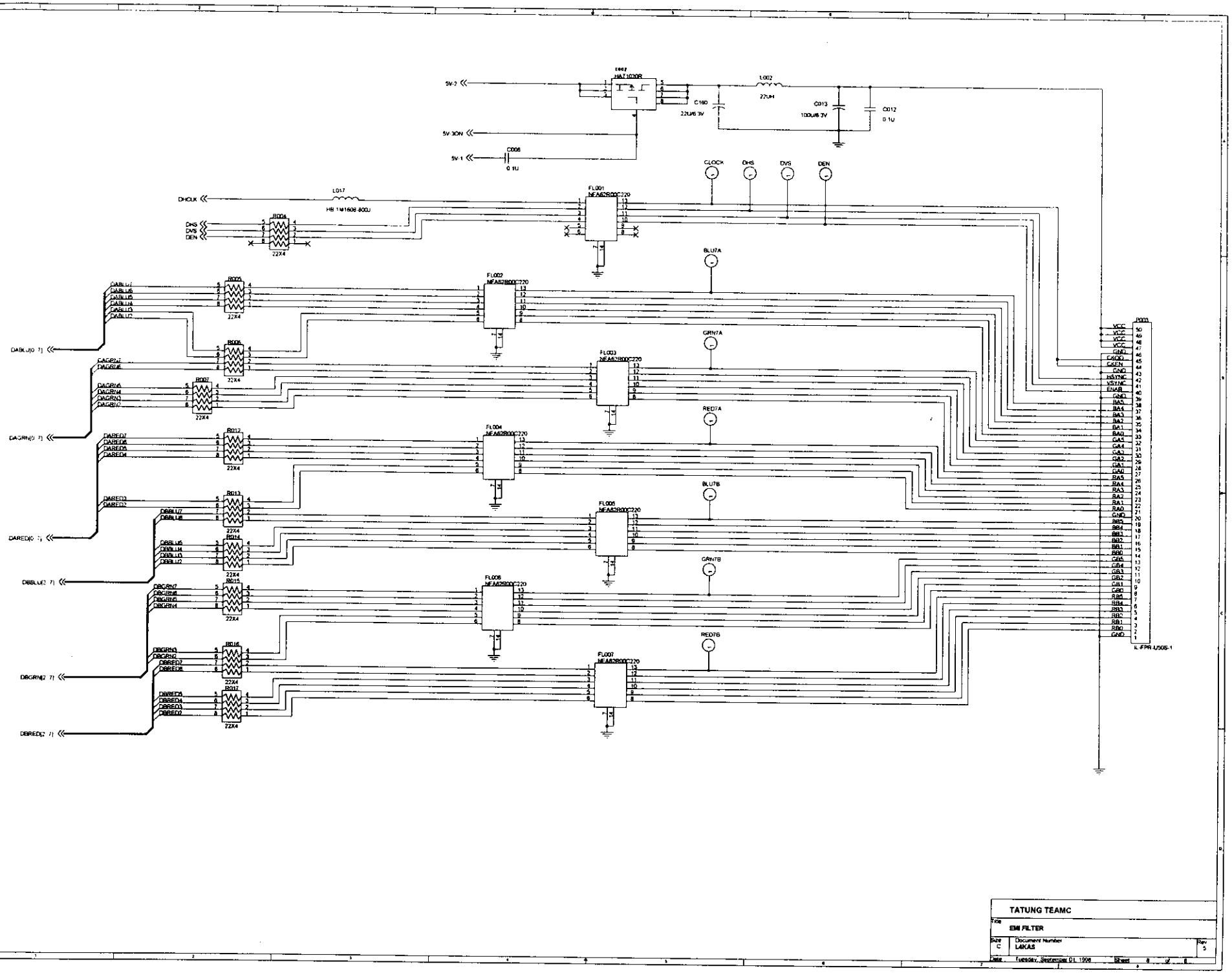

	TATUNG TEAMC
Title	EMI FILTER
Size C	Document Number LAKAS
Rev 5	
Date: Tuesday, September 01, 1998	Sheet 8 of 8

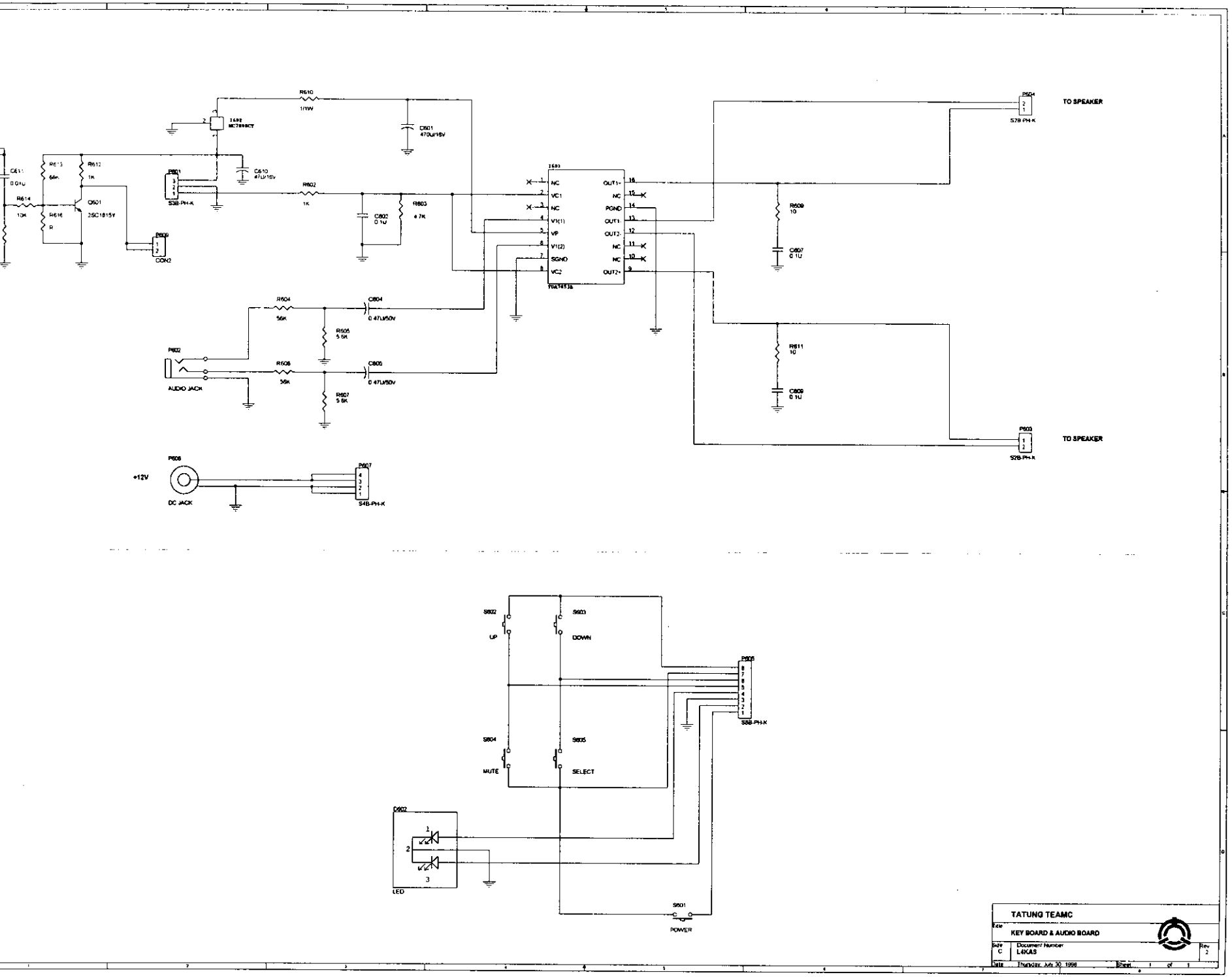
R610
1/1W
C601
470U/16V
C610
470U/16V
R602
1K
C602
0.1U
R603
4.7K
R613
68K
R612
1K
C611
0.01U
R614
10K
R616
R
Q601
2SC1815Y
P601
S3B-PH-K
P609
CON2
IC603
NC
VC1
NC
VI(1)
VP
VI(2)
SGND
VC2
OUT1-
NC
PGND
OUT1+
OUT2-
NC
NC
OUT2+
R604
56K
C604
0.47U/50V
R605
5.6K
P602
AUDIO JACK
R606
56K
C605
0.47U/50V
R607
5.6K
P604
S2B-PH-K
TO SPEAKER
R609
10
C607
0.1U
R611
10
C609
0.1U
P603
S2B-PH-K
TO SPEAKER
P606
+12V
DC JACK
P607
S4B-PH-K
S602
UP
S603
DOWN
S604
MUTE
S605
SELECT
P605
S8B-PH-K
D602
LED
S601
POWER
TATUNG TEAMC
KEY BOARD & AUDIO BOARD
Size
C
Document Number
L4KAS
Rev
2
Date
Thursday, July 30, 1998
Sheet
1
of
1

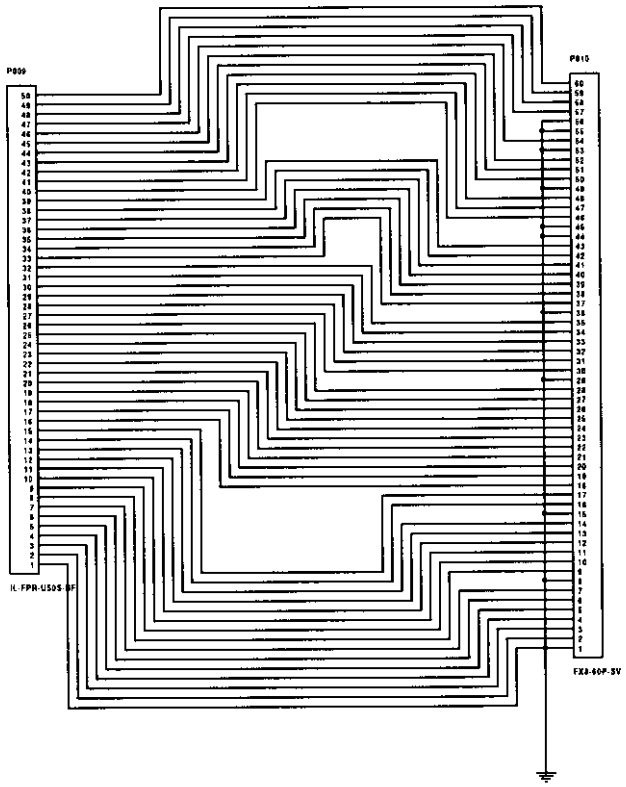

Title	DAUGHTER BOARD	
Size C	Document Number L4KA5	Rev (Rev Date)
Date: Tuesday, November 23, 1999	Sheet 1 of 1	

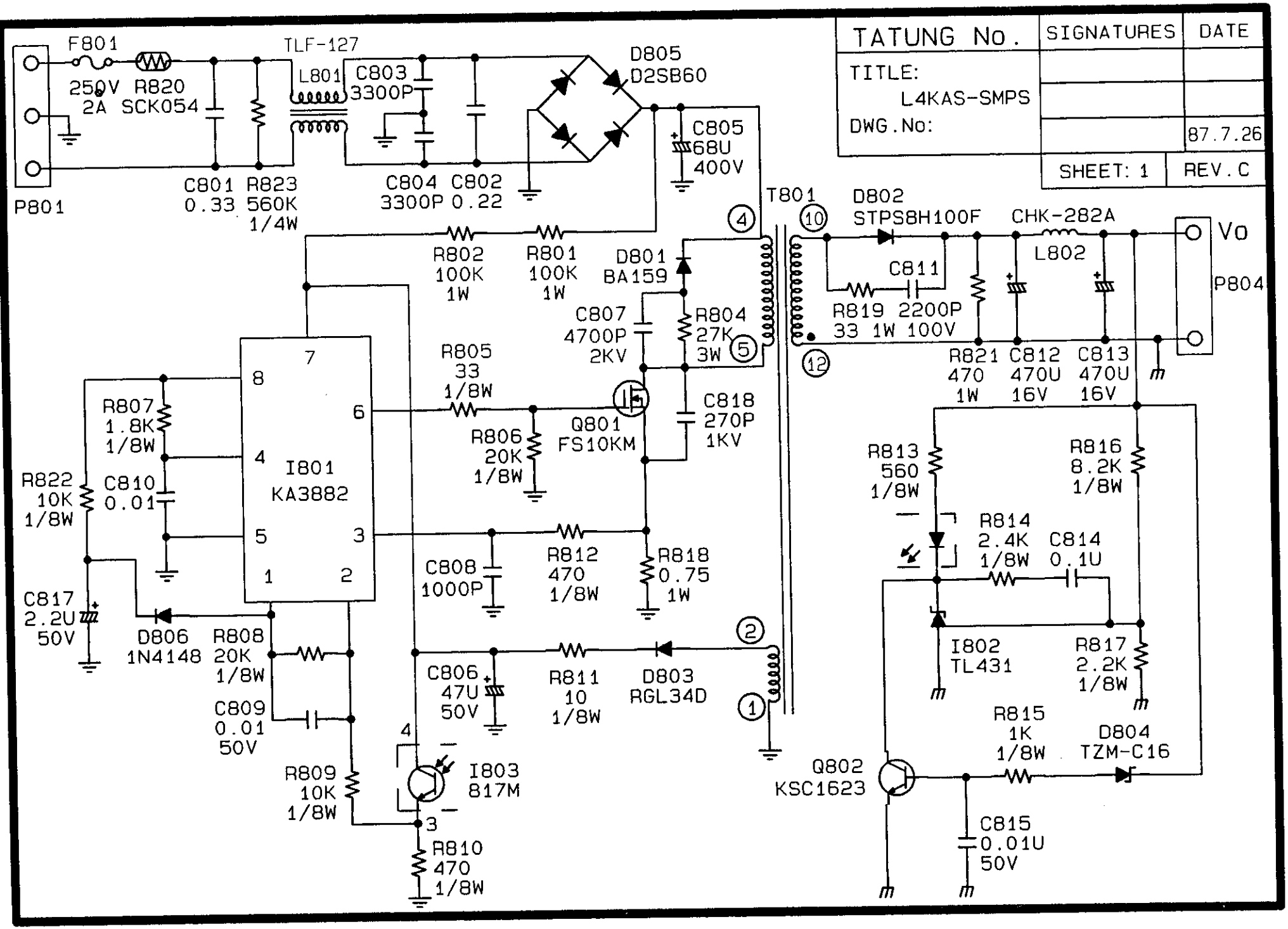
TATUNG No.
SIGNATURES
DATE
TITLE:
L4KAS-SMPS
DWG.No:
87.7.26
SHEET: 1
REV.C
F801
250V
2A
R820
SCK054
TLF-127
L801
C803
3300P
D805
D2SB60
C805
68U
400V
P801
C801
0.33
R823
560K
1/4W
C804
3300P
C802
0.22
T801
D802
STPS8H100F
CHK-282A
L802
Vo
P804
C811
R819
2200P
33 1W 100V
R821
470
1W
C812
470U
16V
C813
470U
16V
R802
100K
1W
R801
100K
1W
D801
BA159
C807
4700P
2KV
R804
27K
3W
R805
33
1/8W
R806
20K
1/8W
Q801
FS10KM
C818
270P
1KV
R807
1.8K
1/8W
R822
10K
1/8W
C810
0.01
I801
KA3882
C817
2.2U
50V
D806
1N4148
R808
20K
1/8W
C809
0.01
50V
C808
1000P
R812
470
1/8W
R818
0.75
1W
C806
47U
50V
R811
10
1/8W
D803
RGL34D
R809
10K
1/8W
I803
817M
R810
470
1/8W
R813
560
1/8W
R816
8.2K
1/8W
R814
2.4K
1/8W
C814
0.1U
I802
TL431
R817
2.2K
1/8W
R815
1K
1/8W
D804
TZM-C16
Q802
KSC1623
C815
0.01U
50V

Exhibit 7

The User's Manual of EUT

TATUNG VDBU