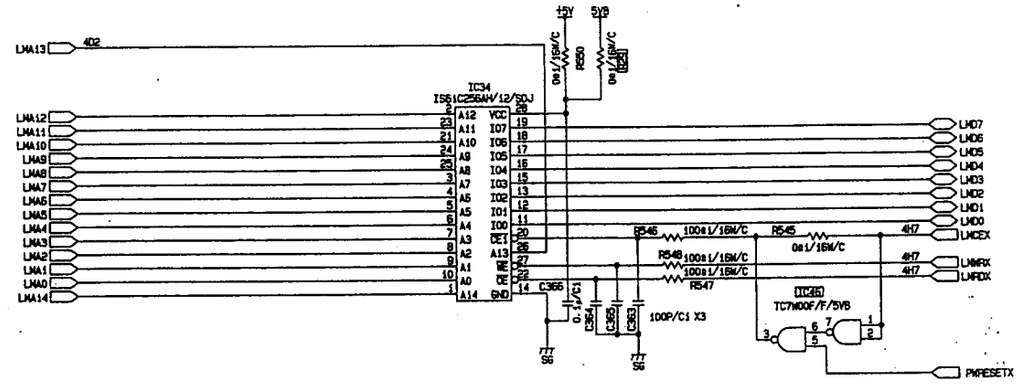

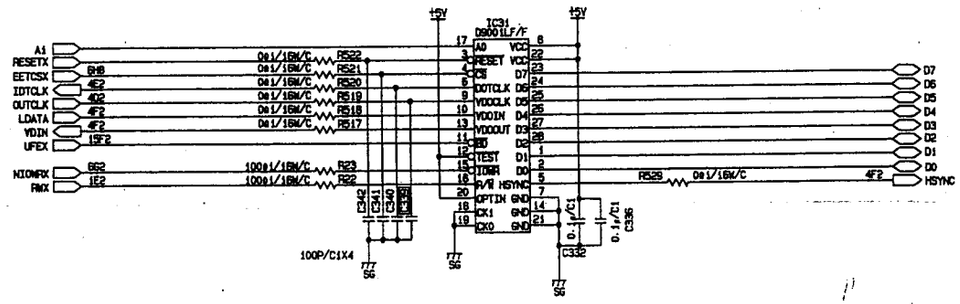

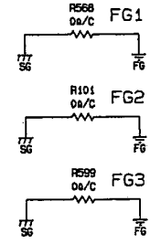

FCC ID: BJIOH-99001
Marstech Report No. 20042D
EXHIBIT C(2)-11

MODEL : AQ8 (FOR PPS1)
PWB No. HBJB0007902

NO.	年月日 DATE	変更 QTY	変更 REVISED	検図 CHECKED	承認 APPROVED	変更 REF. NO.
6						
5						
4						
3						
2						
1						

承認 APPROVED BY: 99.7.28
検図 CHECKED BY: 99.7.28
設計 DESIGNED BY: Y. NUMAKURA 99.7.27
製図 DRAWN BY: Y. NUMAKURA 99.7.27
東芝テック株式会社
TOSHIBA TEC CORPORATION

EET I/F

名称 TITLE: AQ8/9 MAIN PCB (11/16)

図面番号 DRAWING NO.: HBLC00367 01

CATEGORY | PROCESS | SIZE | SERIAL NUMBER | SUB NO.

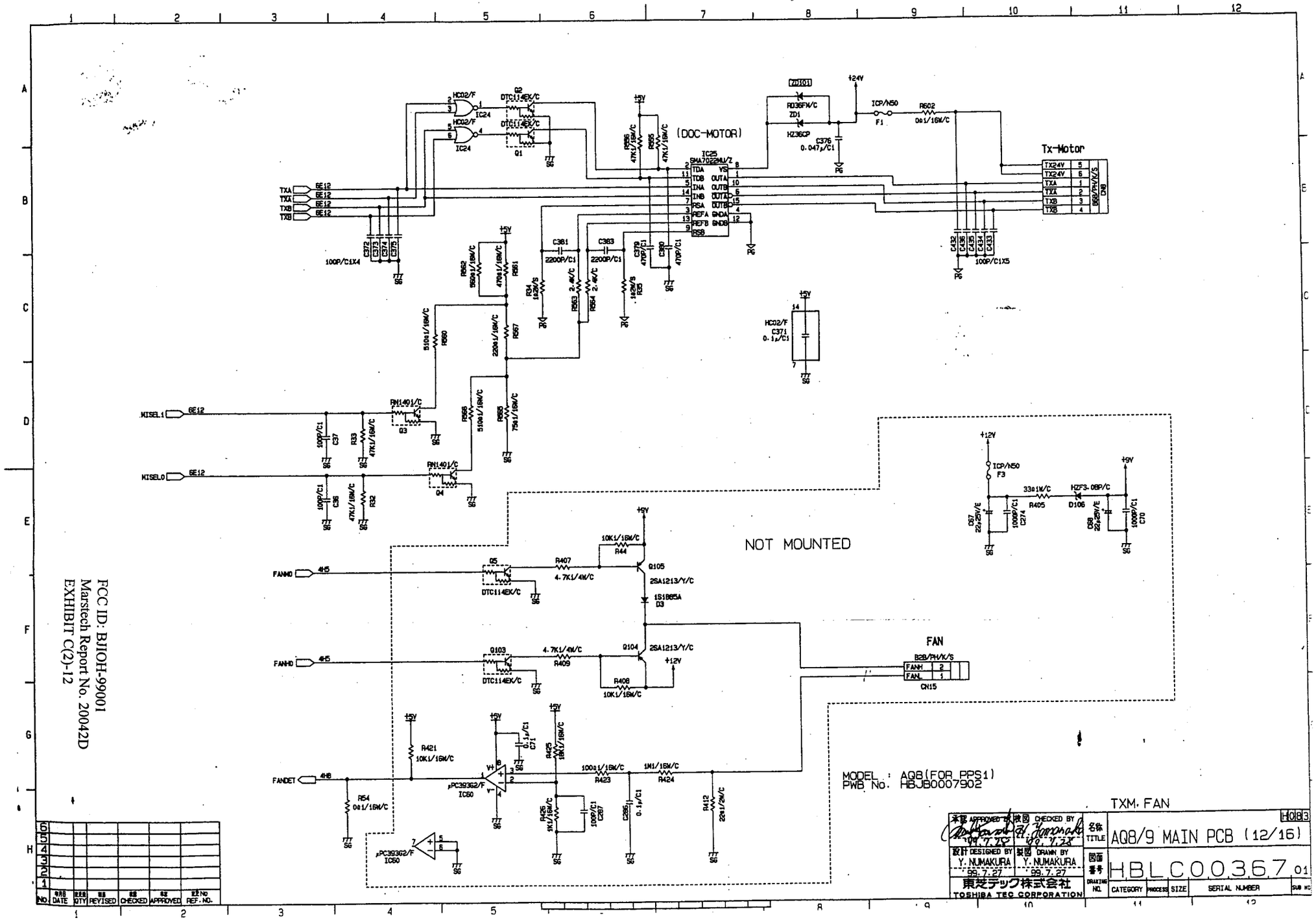

FCC ID: BJIOH-99001
Marstech Report No. 20042D
EXHIBIT C(2)-12

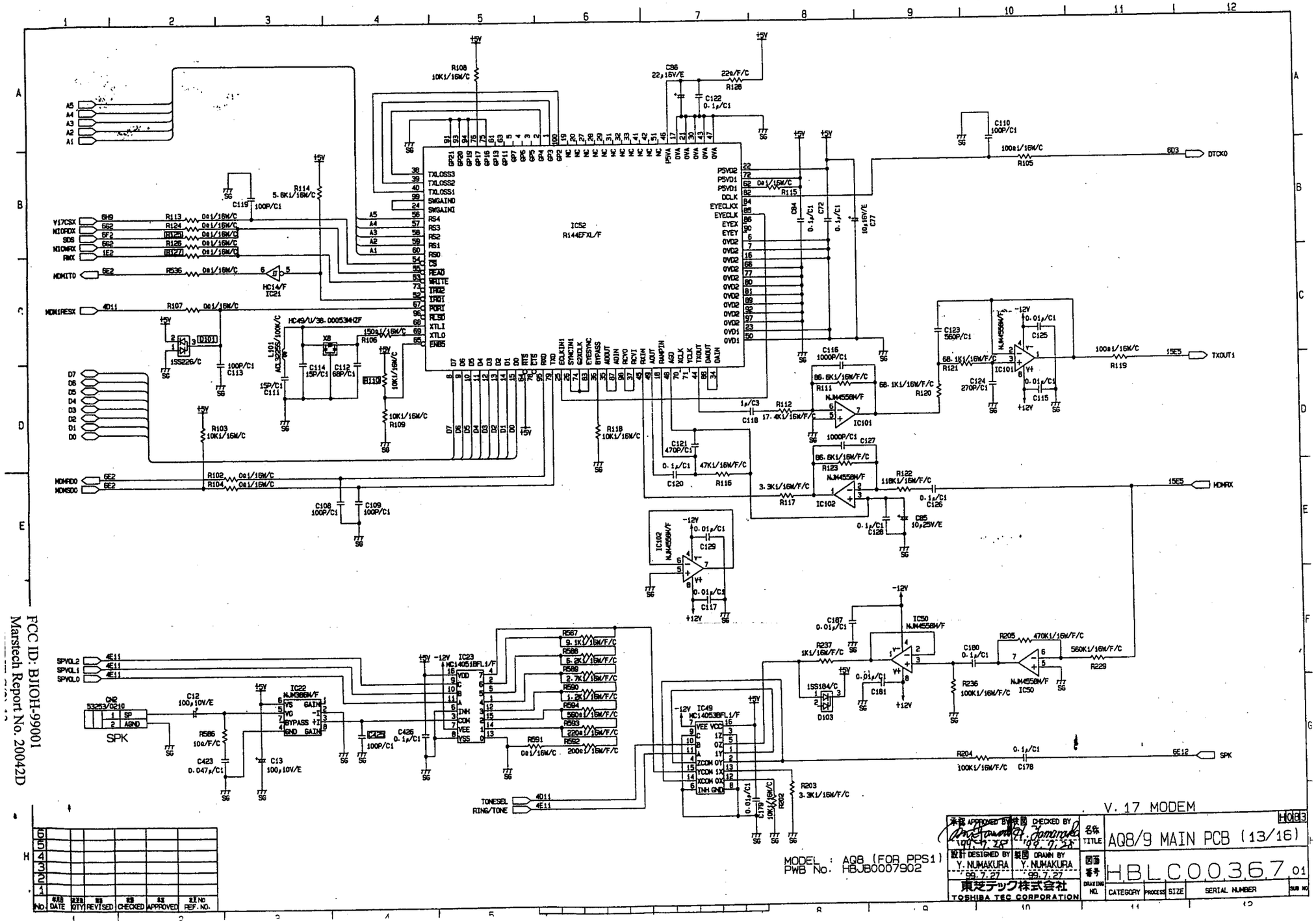

FCC ID: BJIOH-99001
Marstech Report No. 20042D

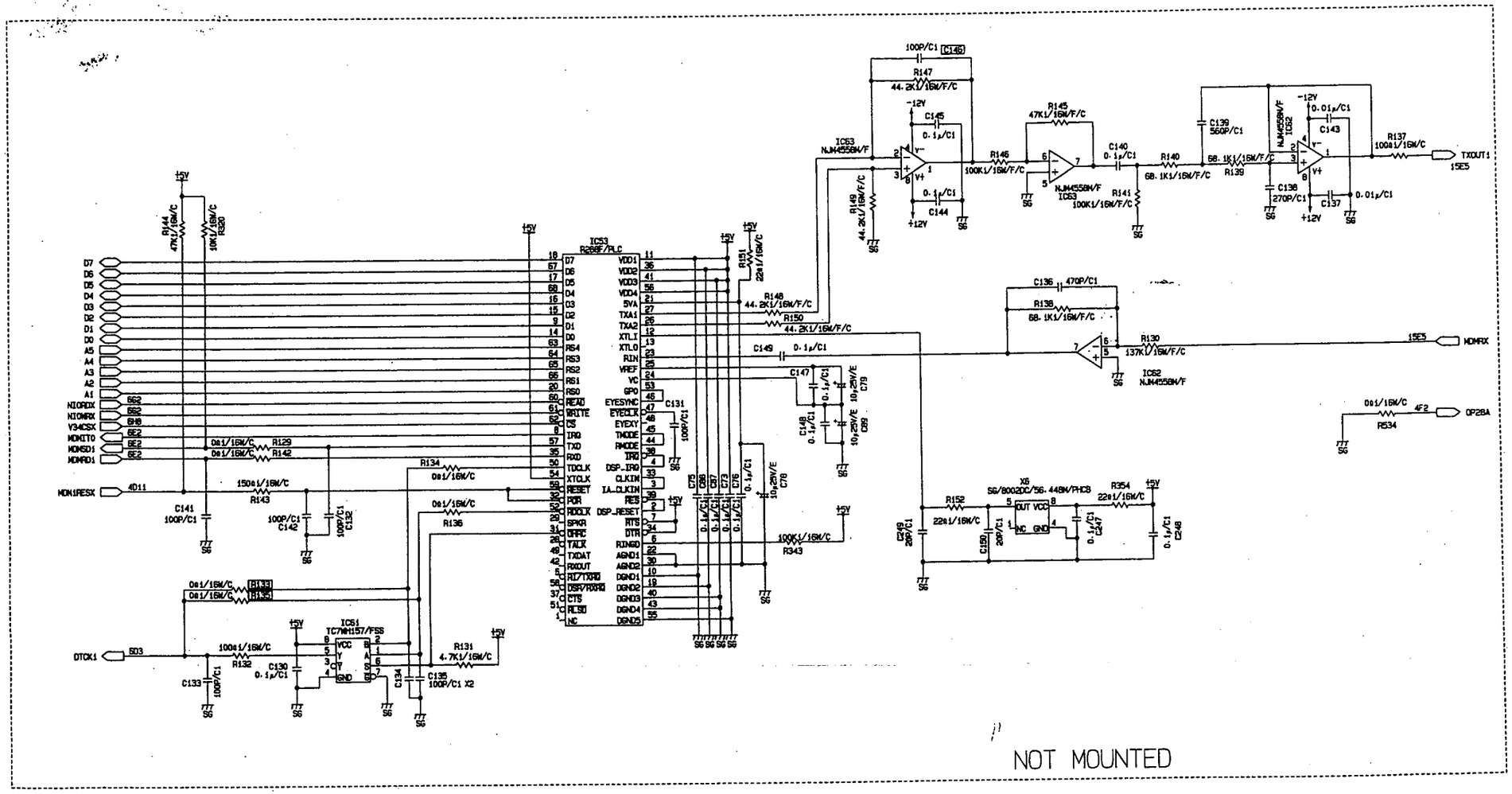

FCC ID: BJIOH-99001
Marstech Report No. 20042D
EXHIBIT C(2)-14

V.34 MODEM

承認 APPROVED BY	検図 CHECKED BY	名称 TITLE	AQ8/9 MAIN PCB (14/16)				H083
設計 DESIGNED BY Y. NUMAKURA '99.7.27	製図 DRAWN BY Y. NUMAKURA '99.7.27	図面番号 DRAWING NO.	HBLC00367				01
東芝テック株式会社 TOSHIBA TEC CORPORATION			CATEGORY	PROCESS	SIZE	SERIAL NUMBER	SUB NO

MODEL : AQ8 (FOR PPS1)
PWB No. HBJB0007902

NO.	年月日 DATE	数量 QTY	改訂 REVISED	検図 CHECKED	承認 APPROVED	変更NO REF. NO.
6						
5						
4						
3						
2						
1						

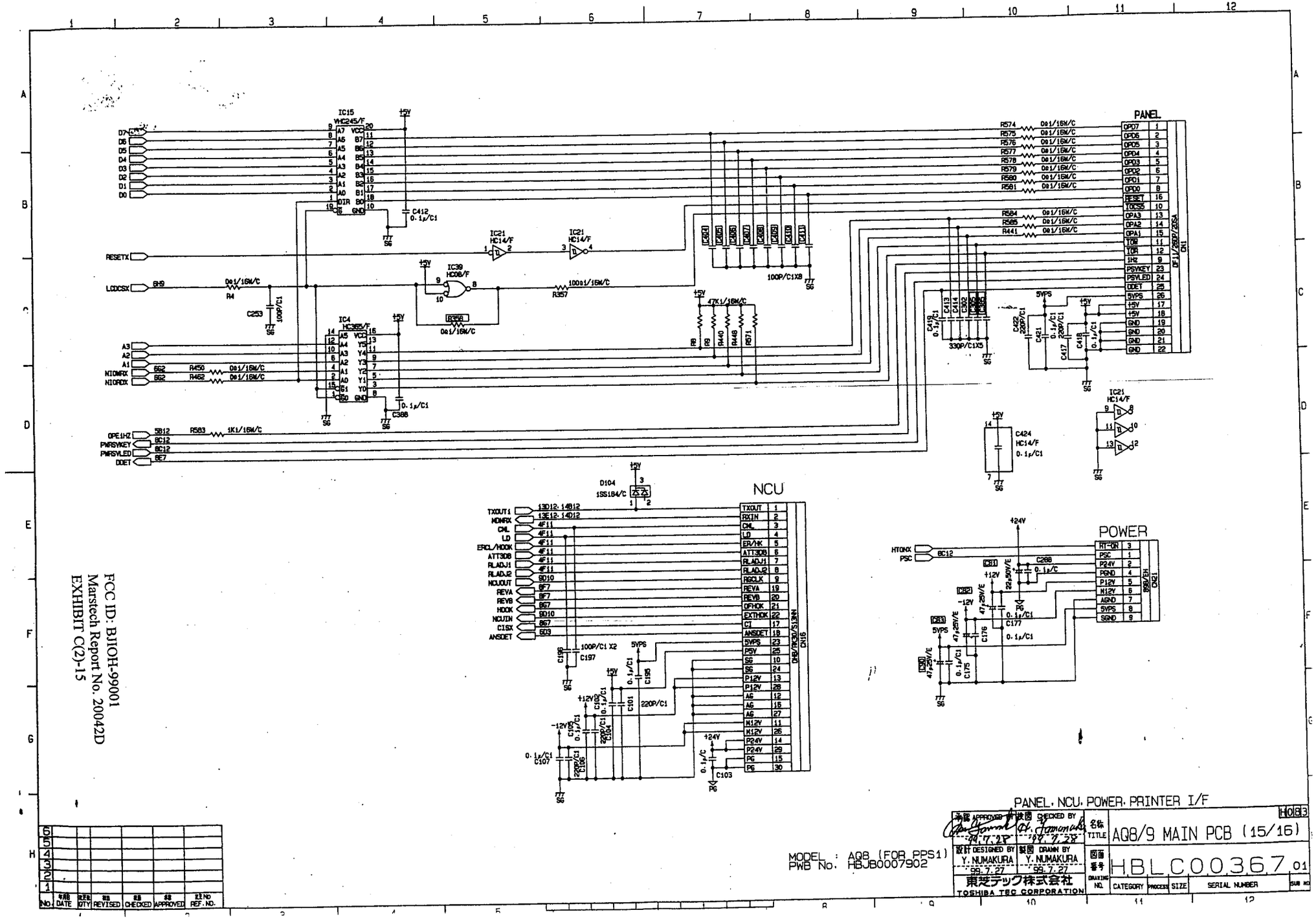

FCC ID: BJIOH-99001
Marstech Report No. 20042D
EXHIBIT C(2)-15

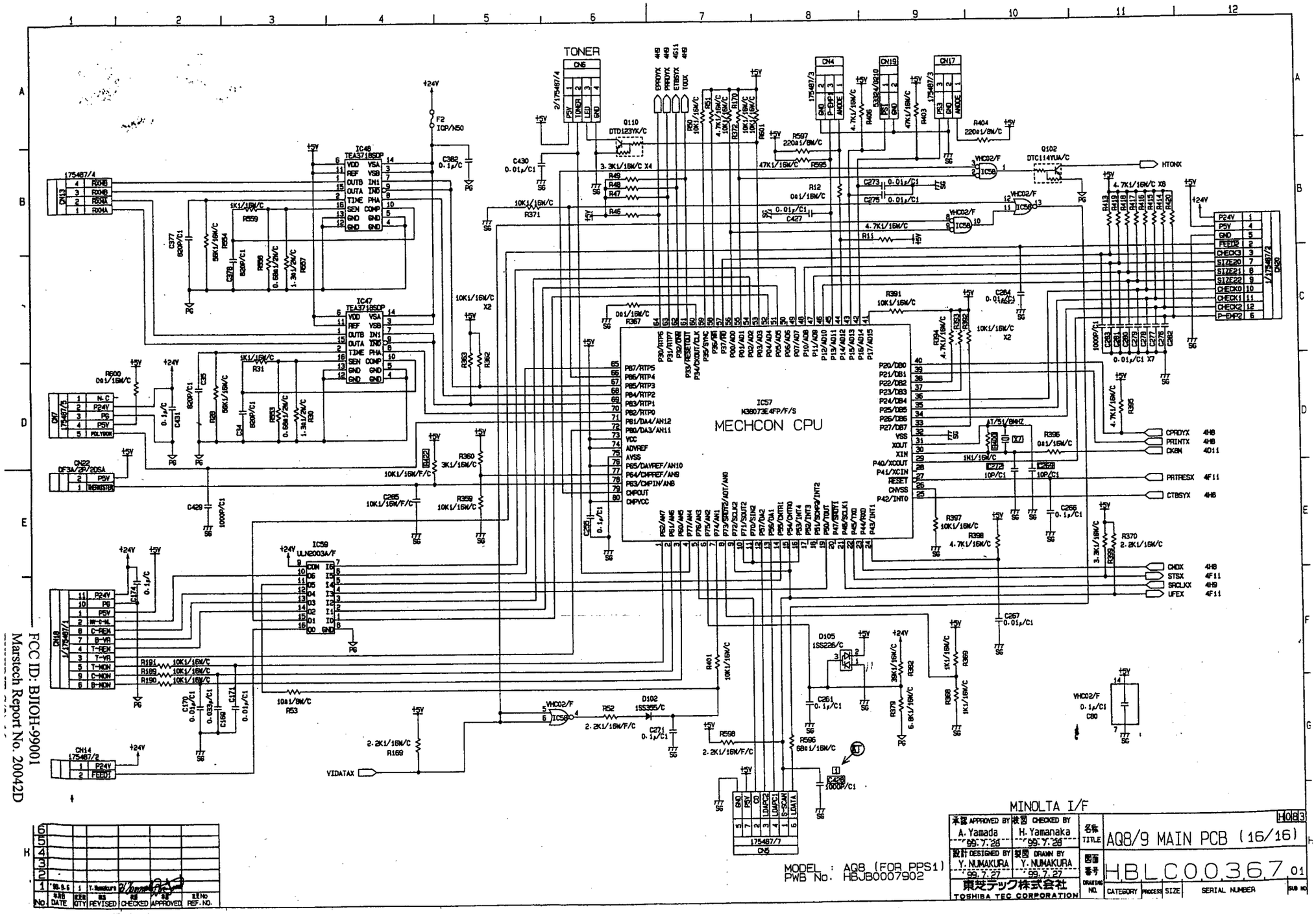

FCC ID: BJIOH-99001
Marstech Report No. 20042D

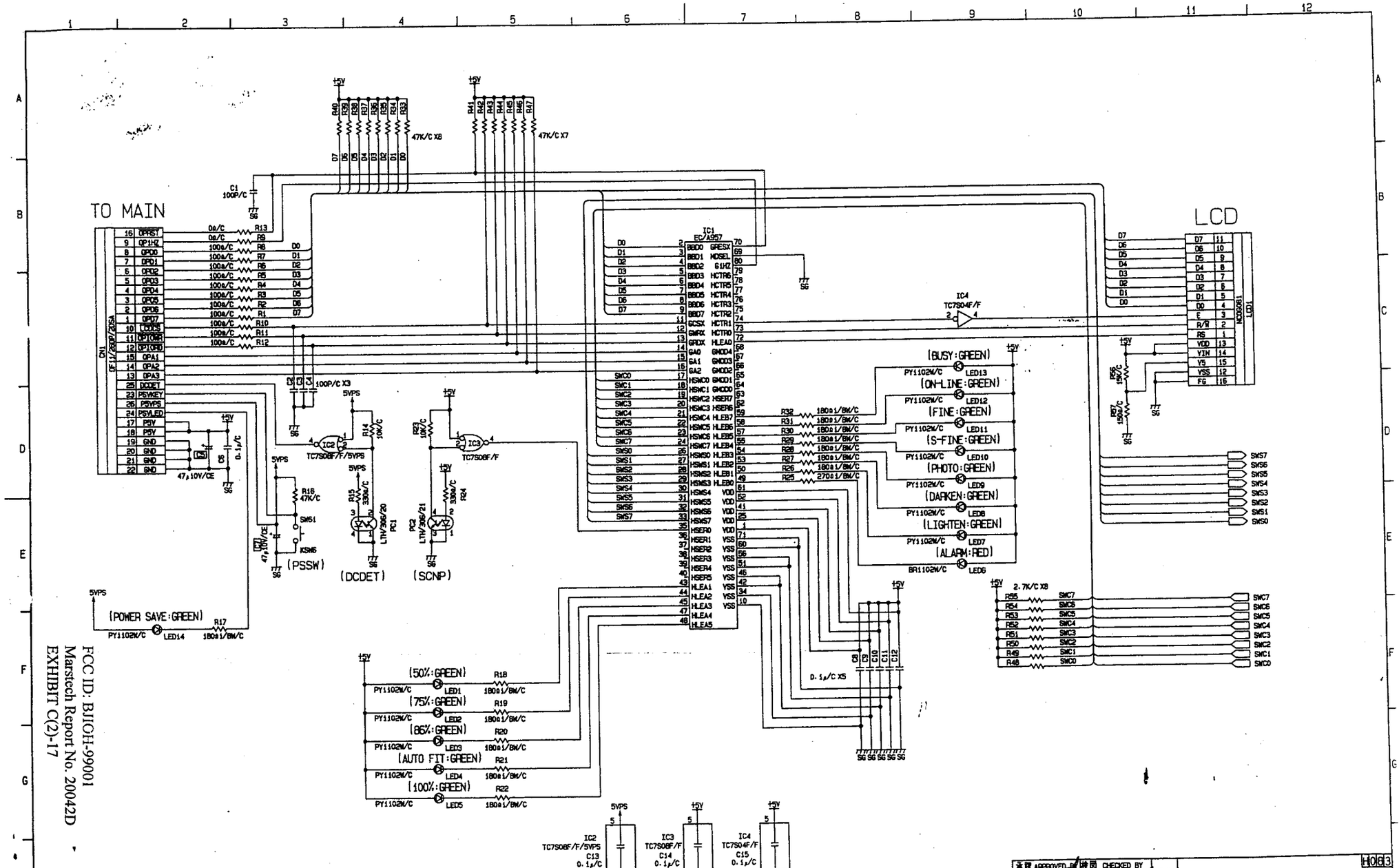

FCC ID: BJIOH-99001
Marstech Report No. 20042D
EXHIBIT C(2)-17

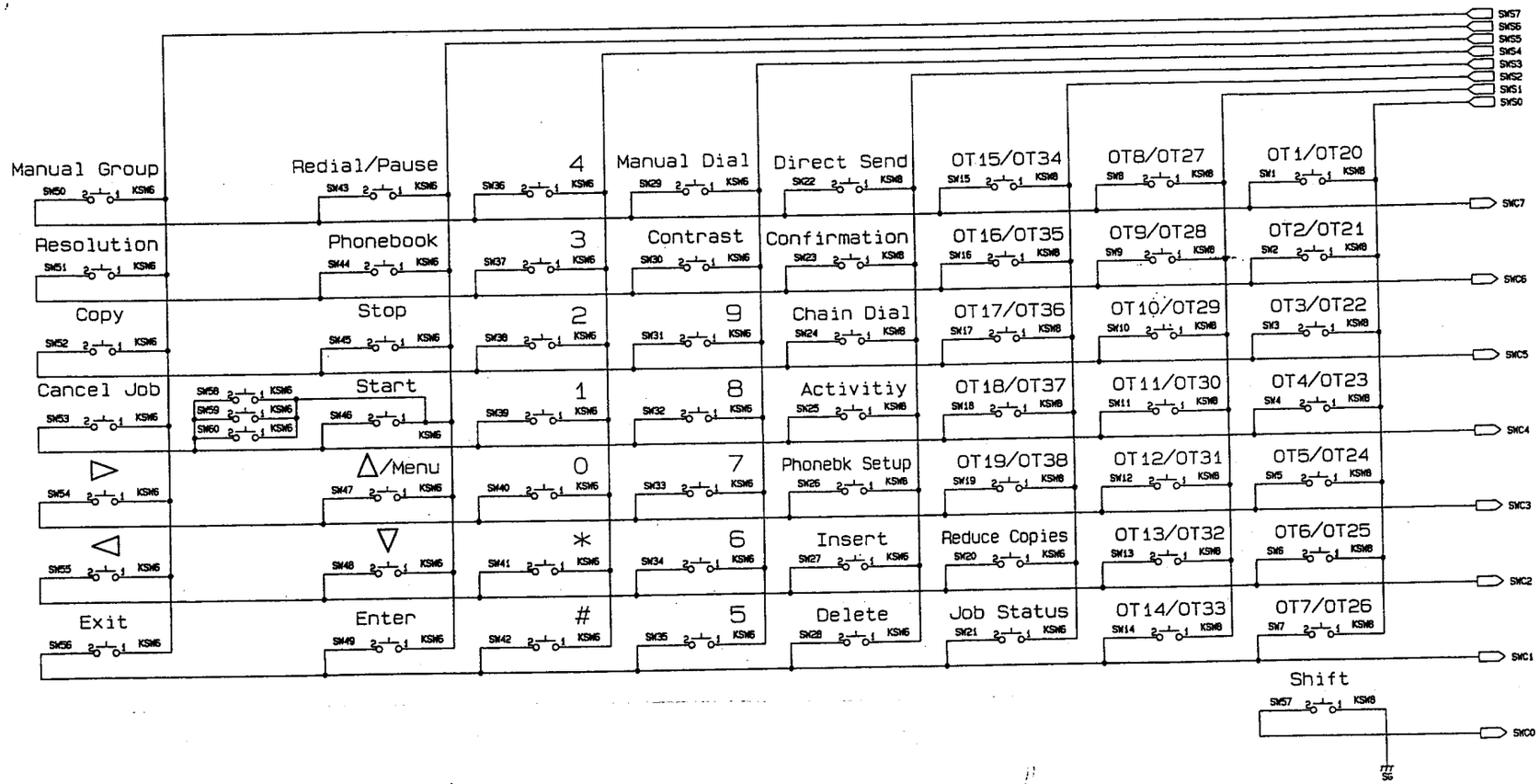

FCC ID: BJIOH-99001
Marstech Report No. 20042D
EXHIBIT C(2)-18

MODEL : AQ8/9 (FOR PPS1)
PWB No. HBJB0008602

承認 APPROVED BY	検図 CHECKED BY	名称 TITLE	AQ8/9 PANEL X PCB (2/2)		
99.8.7	99.8.7				
設計 DESIGNED BY Y. Numakura 99.8.7	製図 DRAWN BY Y. Numakura 99.8.7	図面番号 DRAWING NO.	HBLC00376	01	
東芝テック株式会社 TOSHIBA TEC CORPORATION			CATEGORY / PROCESS / SIZE	SERIAL NUMBER	SUB NO

NO.	DATE	QTY	REVISED	CHECKED	APPROVED	REF. NO.
6						
5						
4						
3						
2						
1						

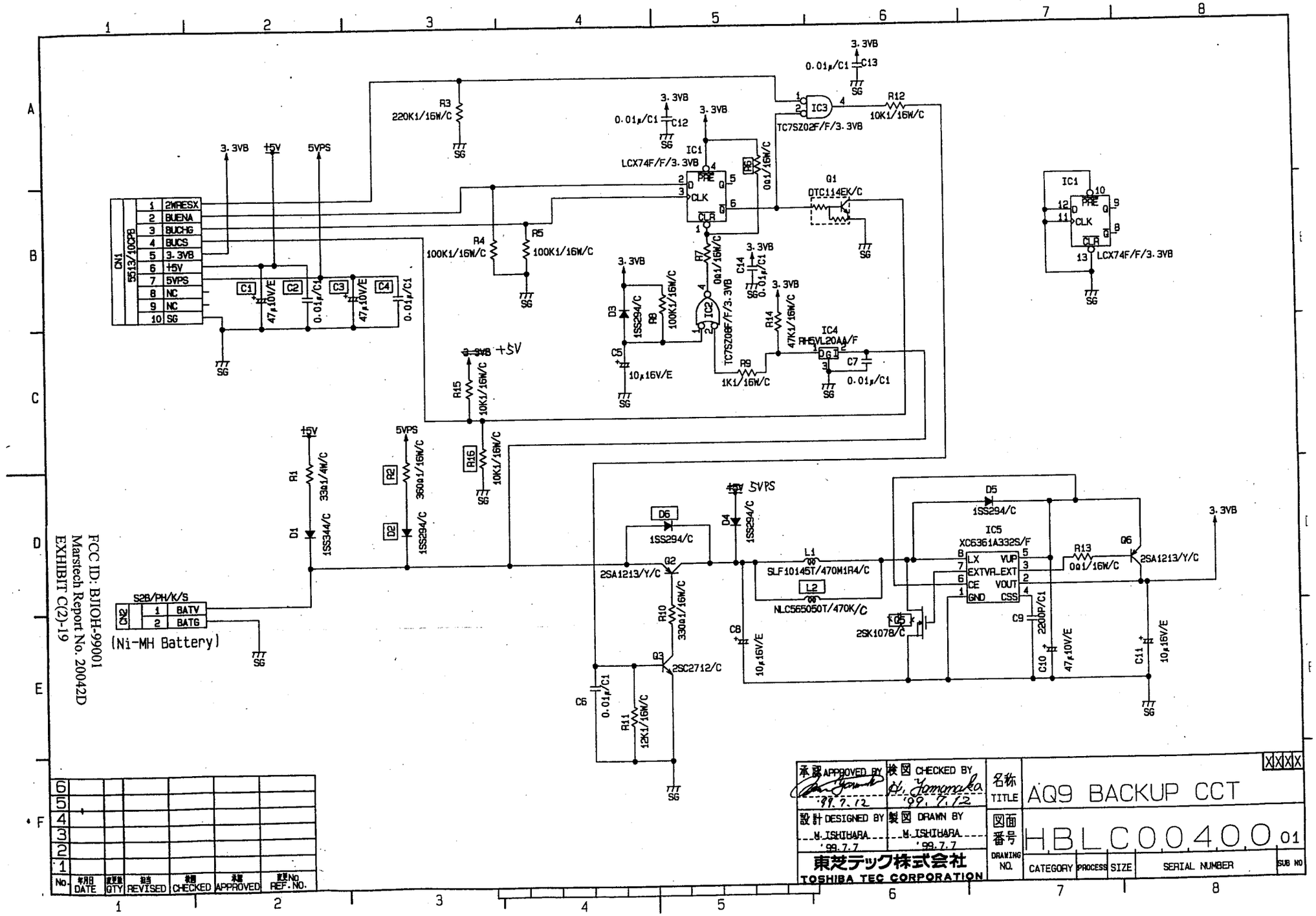

FCC ID: BJIOH-99001
Marstech Report No. 20042D
EXHIBIT C(2)-19

No.	年月日 DATE	変更数 QTY	担当 REVISED	検図 CHECKED	承認 APPROVED	変更No. REF. NO.
6						
5						
4						
3						
2						
1						

承認 APPROVED BY	検図 CHECKED BY	名称 TITLE	AQ9 BACKUP CCT
'99.7.12	H. Yamanaka '99.7.12		
設計 DESIGNED BY	製図 DRAWN BY	図面番号 DRAWING NO.	HBLC00400 01
N. ISHIHARA '99.7.7	N. ISHIHARA '99.7.7		

東芝テック株式会社
TOSHIBA TEC CORPORATION

CATEGORY	PROCESS	SIZE	SERIAL NUMBER	SUB NO

4.CIRCUIT DRAWING

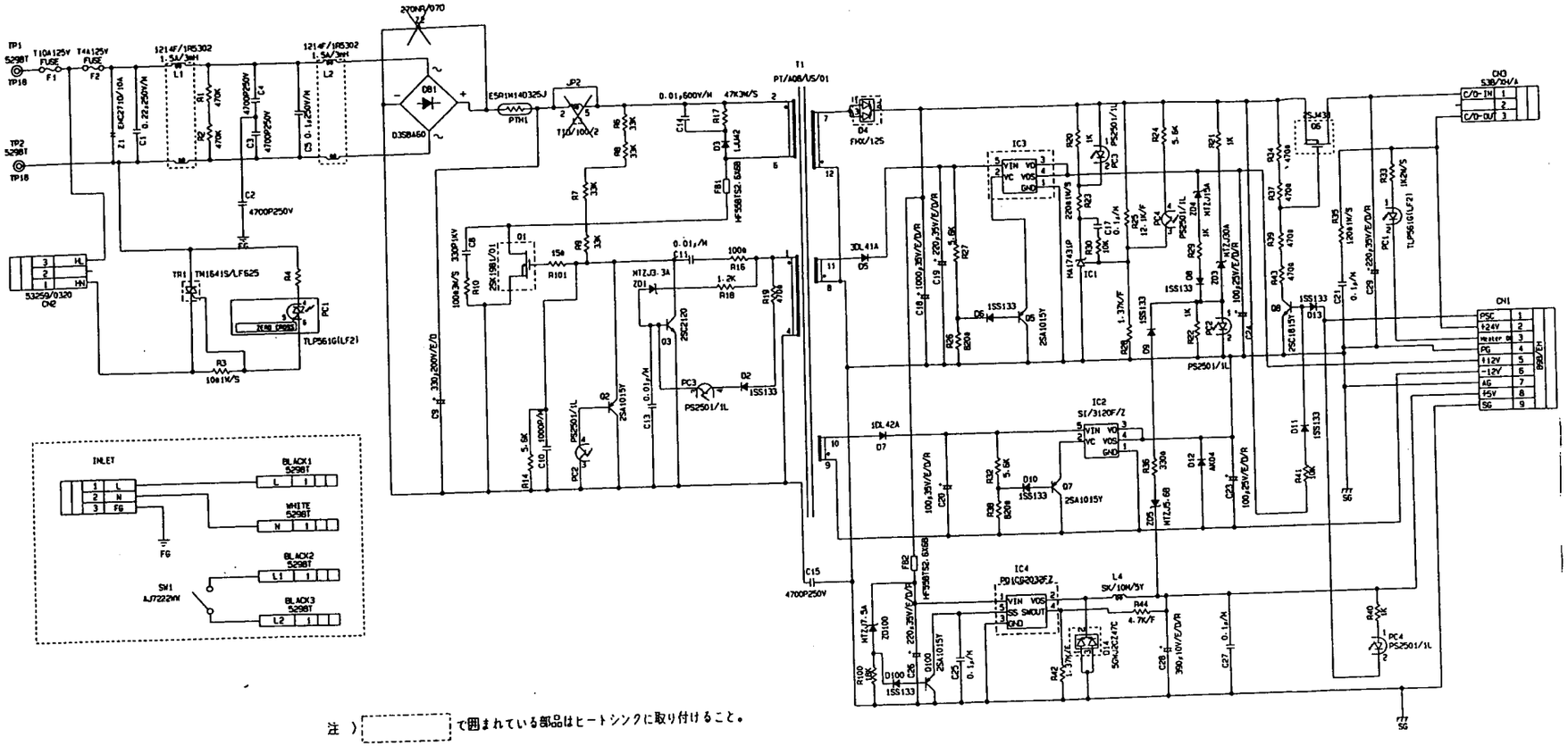

注) [ ] で囲まれている部品はヒートシンクに取り付けること。

Note) Parts shown inside [ ] should be secured to the Heat sink.

FCC ID: BJIOH-99001
Marstech Report No. 20042D
EXHIBIT C(2)-20

TYTLE: 品 名: PS-AQ8/9-US-CCT

DRAWING No. 図 番: VDLD00014 01