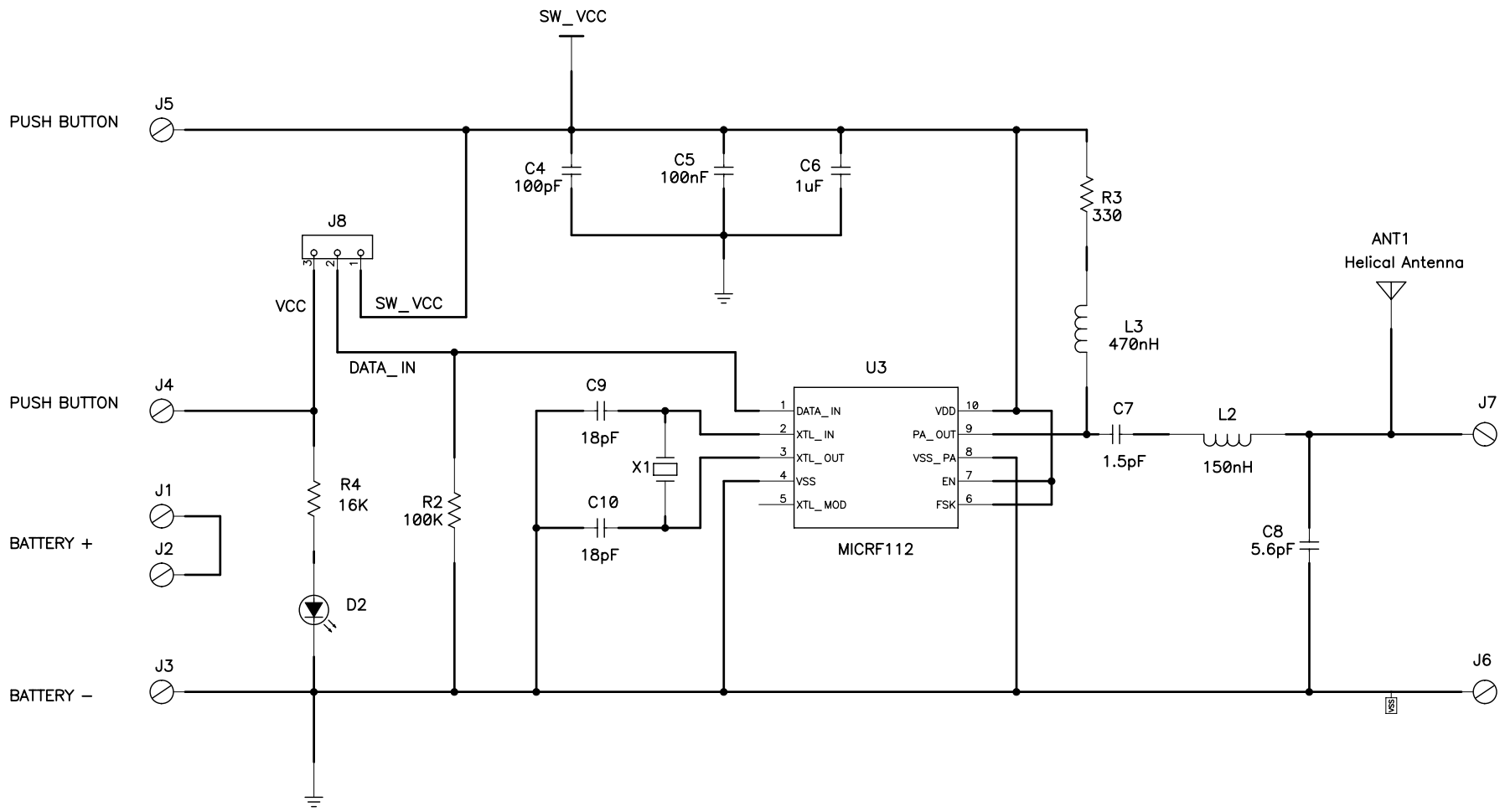

Heath/Zenith

Title Transmitter RF Board		
Size B	Number SL–6700–Tx02	Rev 2
Date August 21, 2007		Drawn by BAtkins
Filename 085-6700-Tx02Rev3.sch		Sheet 1 of 1