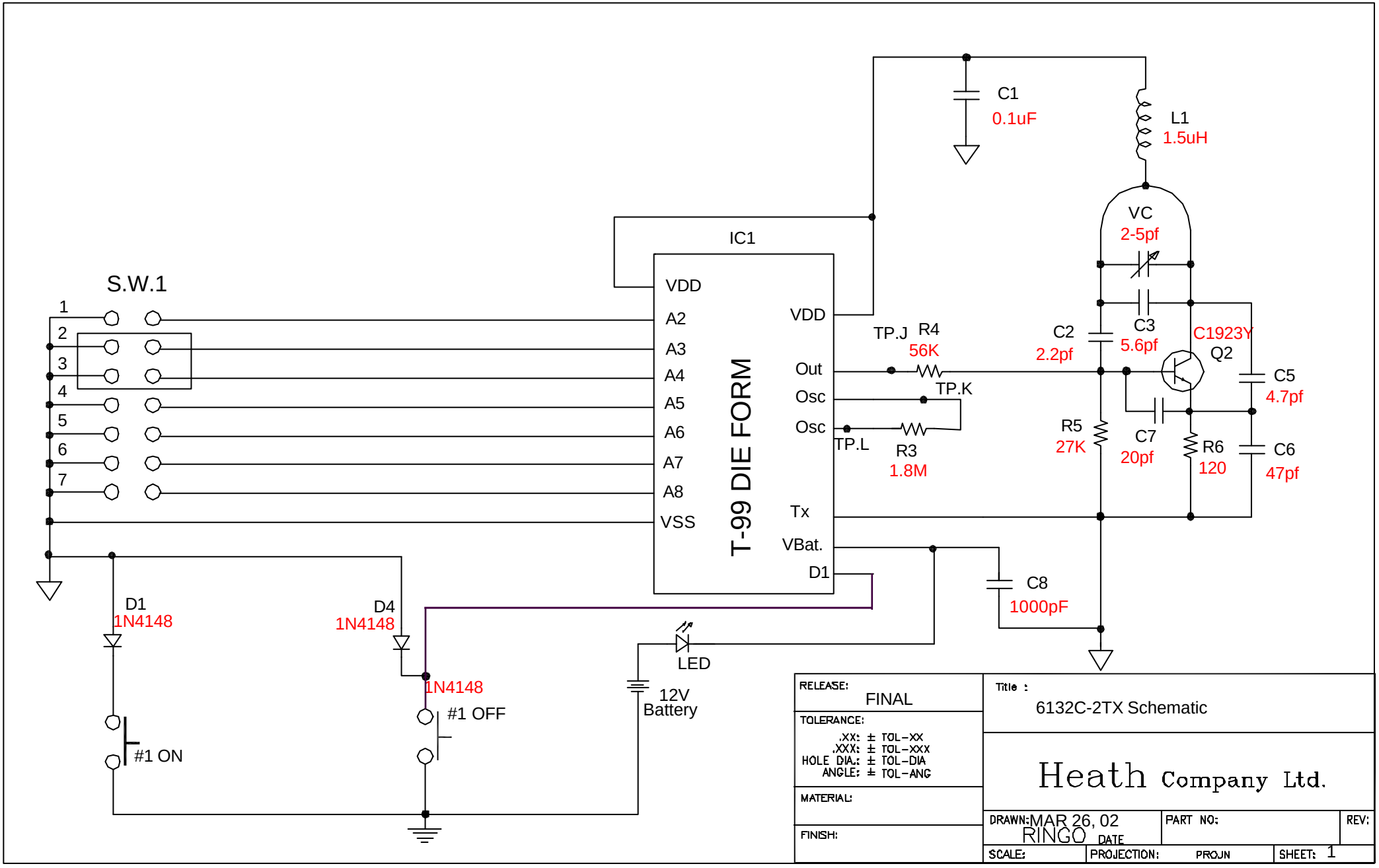
S.W.1
1
2
3
4
5
6
7
IC1
T-99 DIE FORM
VDD
A2
A3
A4
A5
A6
A7
A8
VSS
VDD
Out
Osc
Osc
Tx
VBat.
D1
C1
0.1uF
L1
1.5uH
VC
2-5pf
C3
5.6pf
C2
2.2pf
C1923Y
Q2
C5
4.7pf
C6
47pf
TP.J
R4
56K
TP.K
TP.L
R3
1.8M
R5
27K
C7
20pf
R6
120
C8
1000pF
D1
1N4148
D4
1N4148
1N4148
#1 OFF
#1 ON
LED
12V
Battery
RELEASE:
FINAL
TOLERANCE:
.XX: ± TOL-XX
.XXX: ± TOL-XXX
HOLE DIA.: ± TOL-DIA
ANGLE: ± TOL-ANG
MATERIAL:
FINISH:
Title :
6132C-2TX Schematic
Heath Company Ltd.
DRAWN:MAR 26, 02
RINGO
DATE
PART NO:
REV:
SCALE:
PROJECTION:
PROJN
SHEET: 1