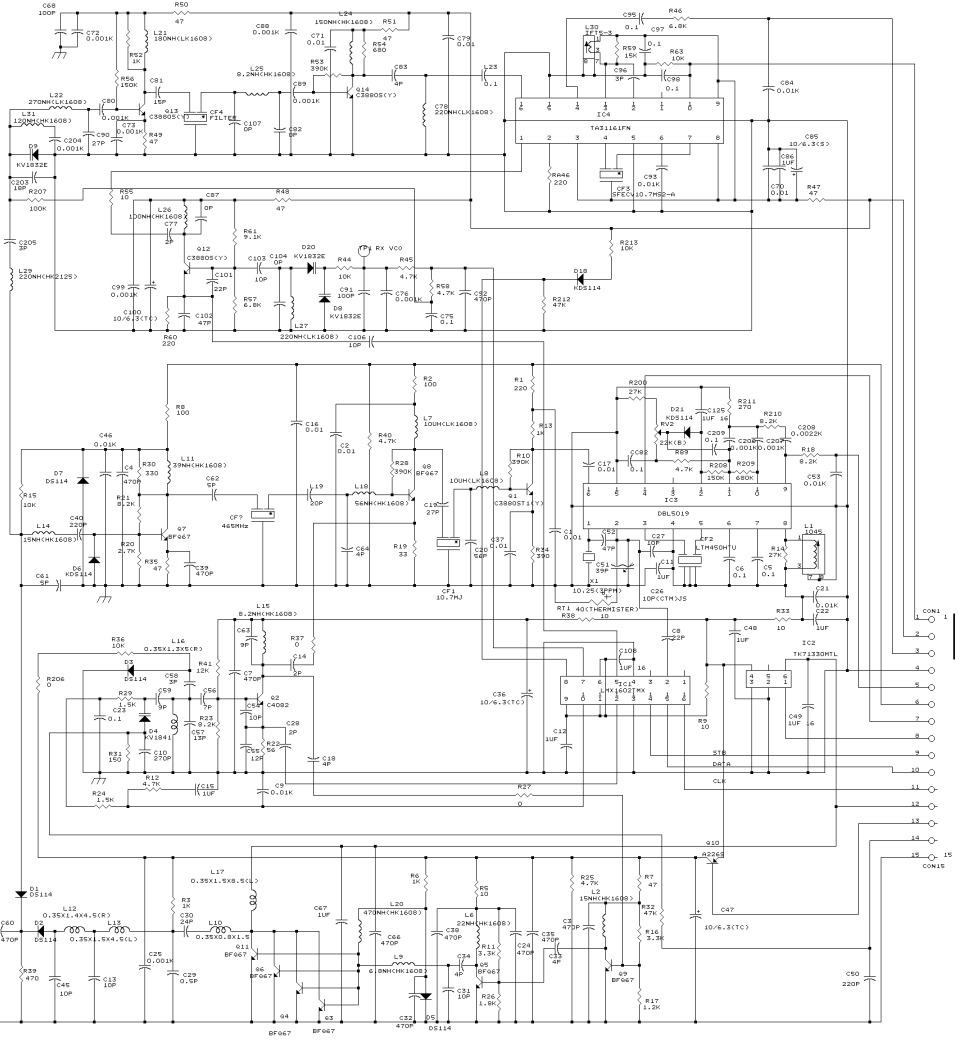
C68 100P
C72 0.001K
R50 47
L21 180NH(LK1608)
R52 1K
R54 150K
C81 15P
Q13 C3905(Y)
CF4 FILTER
C107 0P
C88 0.001K
L24 150NH(HK1608)
R51 47
R54 680
C71 0.01
R53 390K
C83 4P
L25 8.2NH(HK1608)
C89 0.001K
Q14 C3905(Y)
C78 220NH(LK1608)
C79 0.01
L23 0.1
C95 0.1
R46 6.8K
L30 1FK-2
C97 0.1
R59 15K
R63 10K
C96 3P
C98 0.1
C84 0.01K
IC4
TA31161FN
R446 220
CF3 SFECV10.7MS2-A
C94 0.01K
C85 10/6.3(S)
C86 1UF
C70 0.01
R47 47
L22 270NH(LK1608)
L31 150NH(HK1608)
C80 0.001K
C73 0.001K
R49 47
C204 0.001K
C90 27P
D9 KV1832E
C203 1UP
R207 100K
R55 15
L26 120NH(HK1608)
C77 2P
C87 0P
R48 47
R61 9.1K
C205 3P
L29 220NH(HK2125)
Q12 C3905(Y)
C103 10P
C104 0P
D20 KV1832E
RX VCO
R44 10K
R45 4.7K
R213 10K
D18 MDS114
C99 0.001K
C101 22P
R7 6.8K
L27 220NH(LK1608)
C91 100P
D8 KV1832E
C76 0.001K
R58 4.7K
C92 470P
C75 0.1
R212 47K
C100 10/6.3(TC)
R60 220
C102 47P
C106 10P
R2 100
R1 220
R8 100
C16 0.01
L7 10UH(LK1608)
C5 0.01
R40 4.7K
R28 390K
Q8 BF967
R13 1K
R200 27K
D21 MDS114
C125 1UF 16
R211 270
R210 8.2K
C208 0.0022K
RV2 22K(B)
C209 0.1
C206 0.001K
C207 0.001K
R89 4.7K
R18 8.2K
C82 0.1
C17 0.01
R10 390K
L9 10UH(LK1608)
Q1 C3905TA(Y)
R208 150K
R209 680K
C53 0.01K
IC3
DBL5019
C46 0.01K
D7 DS114
C4 470P
R30 330
L11 39NH(HK1608)
C62 6P
L19 20P
L18 56NH(HK1608)
C19 27P
R15 10K
R21 8.2K
CF3 465MHz
C40 220P
L14 15NH(HK1608)
R20 2.7K
R35 47
Q7 BF967
C39 470P
D6 KDS114
C61 5P
C64 4P
R19 33
C20 68P
C37 0.01
R34 390
C7 0.001
C62 47P
C27 10P
CF2 LTM450HTU
C51 39P
X1 10.25(SPPM)
C14 1UF
C26 10P(CTM)JS
C6 0.1
R14 27K
C5 0.1
L1 1045
C21 0.01K
C22 1UF
RT1 40(THERMISTER)
R38 10
R33 10
C8 22P
C40 1UF
IC2
TK7133MTL
C108 1UF 16
IC1
C36 10/6.3(TC)
C12 1UF
R3 10
C49 1UF 6
R36 10K
L16 0.35X1.5X6(R)
D5 DS114
R41 12K
C50 3P
C59 3P
C63 9P
L15 8.2NH(HK1608)
R37 0
C7 470P
C14 3P
R29 1.5K
C23 0.1
D4 KV1841
C56 7P
C57 13P
C54 10P
Q2 C4082
C28 2P
R31 150
C10 270P
R22 56
C18 4P
R12 4.7K
C15 1UF
C9 0.01K
R24 1.5K
R27 0
STB
DATA
CLK
CON1
CON15
R206 0
Q10 A2263
D1 DS114
L17 0.35X1.5X8.5(L)
R6 1K
R5 10
R25 4.7K
R7 47
CON2
C60 470P
D2 DS114
L12 0.35X1.4X4.5(R)
L13 0.35X1.5X4.5(L)
R3 1K
C30 24P
L10 0.35X0.8X1.5
L20 470NH(HK1608)
L6 22NH(HK1608)
L2 15NH(HK1608)
R32 47K
C47 10/6.3(TC)
C67 1UF
C66 470P
C38 470P
C35 470P
C27 470P
C33 4P
R16 3.3K
Q11 BF967
Q6 BF967
L9 6.8NH(HK1608)
C34 4P
R11 3.3K
Q5 BF967
C31 10P
R26 1.8K
Q9 BF967
R39 470
C45 10P
C13 10P
C25 0.001K
C29 0.5P
Q4 BF967
Q3 BF967
C32 470P
D5 DS114
R17 1.2K
C50 220P