Block diagram
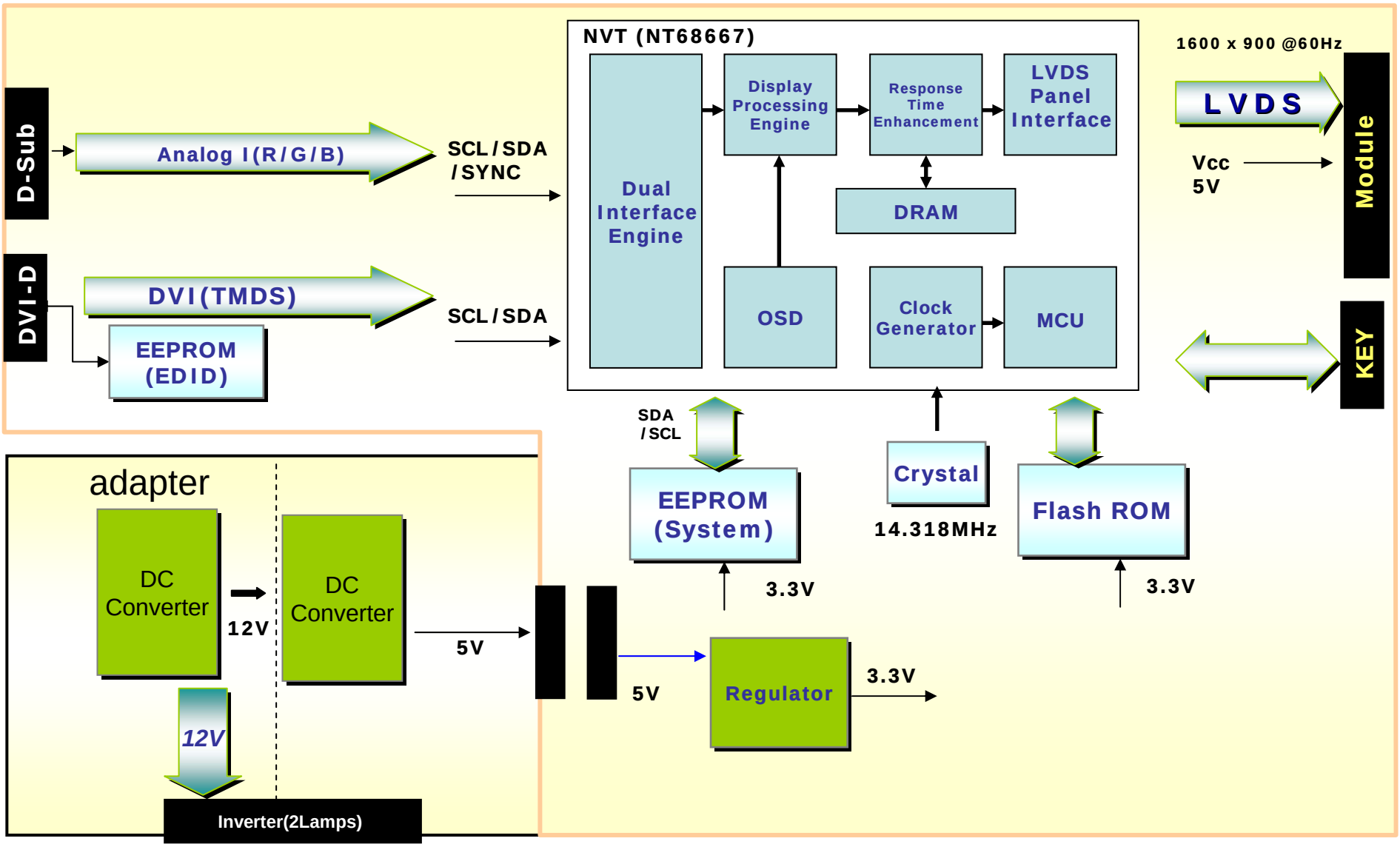
W2043TV