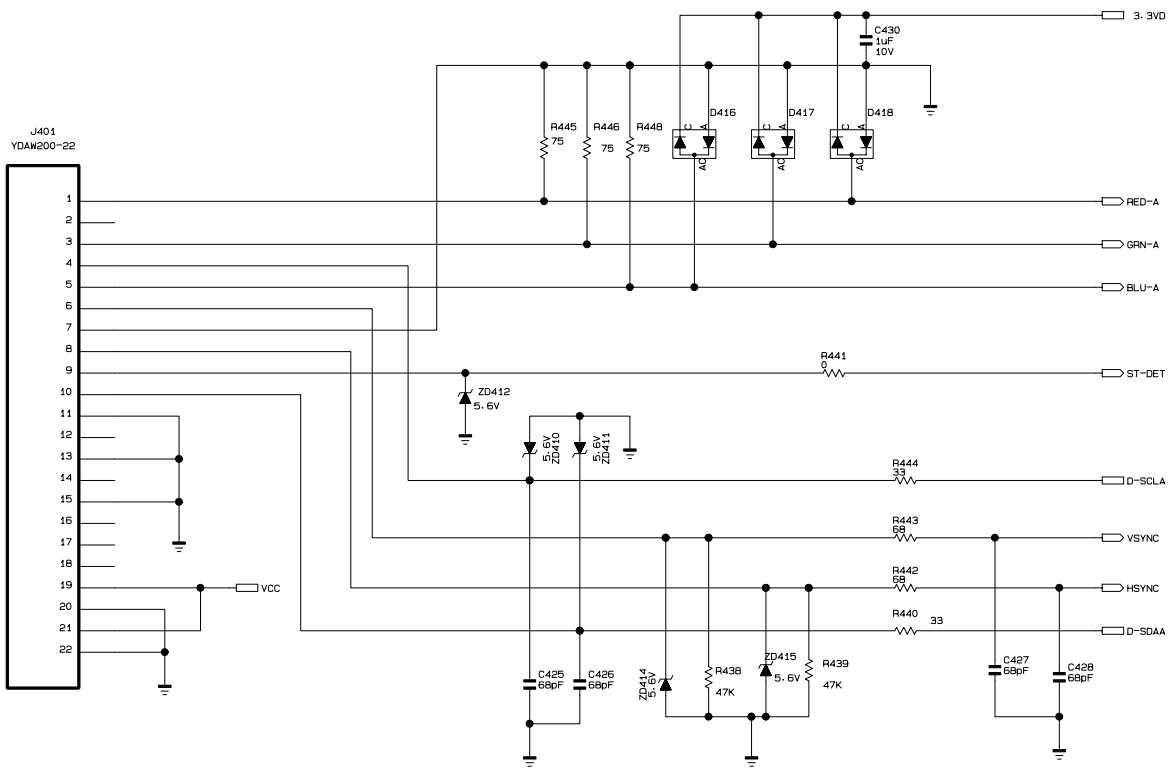

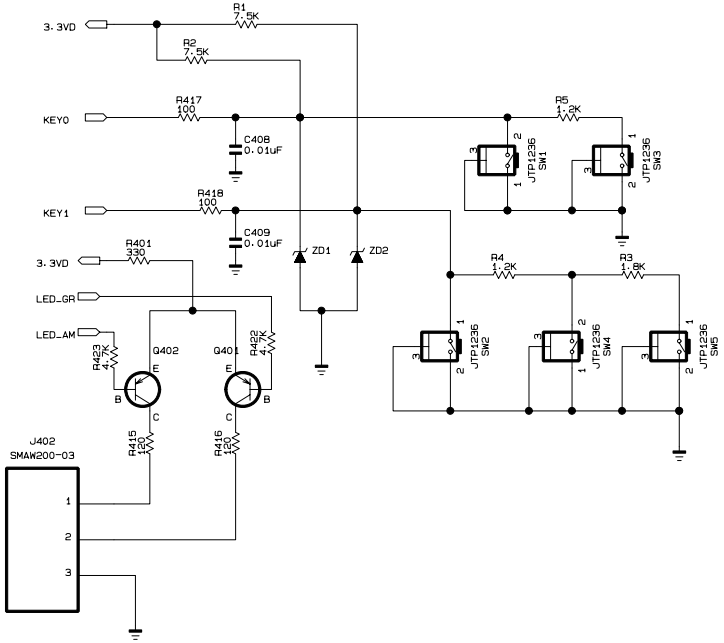

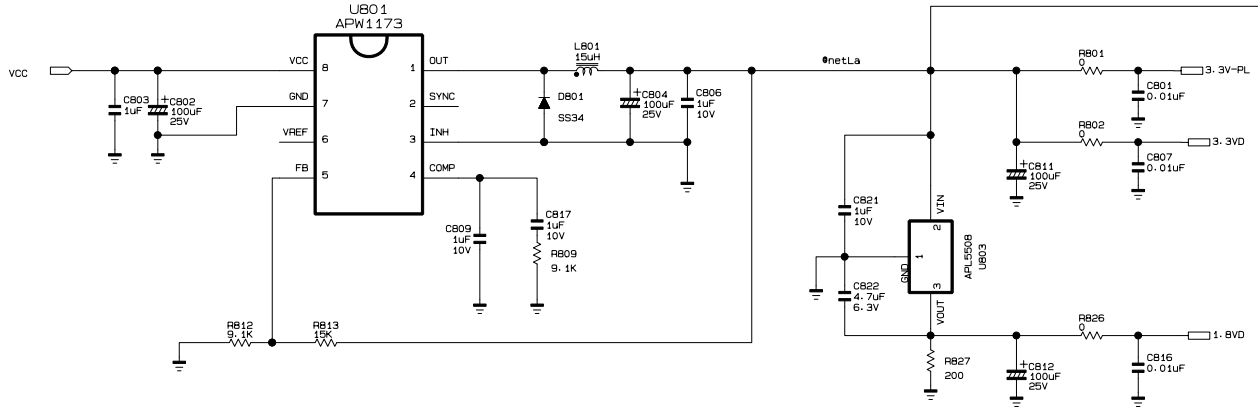

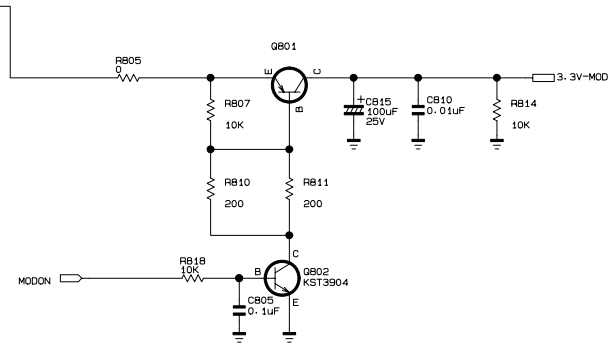

THE ⚠ SYMBOL MARK OF THIS SCHEMETIC DIAGRAM INCORPORATES SPECIAL FEATURES IMPORTANT FOR PROTECTION FROM X-RADIATION. FILRE AND ELECTRICAL SHOCK HAZARDS. WHEN SERVICING IF IS ESSENTIAL THAT ONLY MANUFATURES SPECFIED PARTS BE USED FOR THE CRITICAL COMPONENTS IN THE ⚠ SYMBOL MARK OF THE SCHEMETIC.

LG ELECTRONICS

MODEL	L1552	DATE	'06.03.03
BLOCK		SHEET	2/3