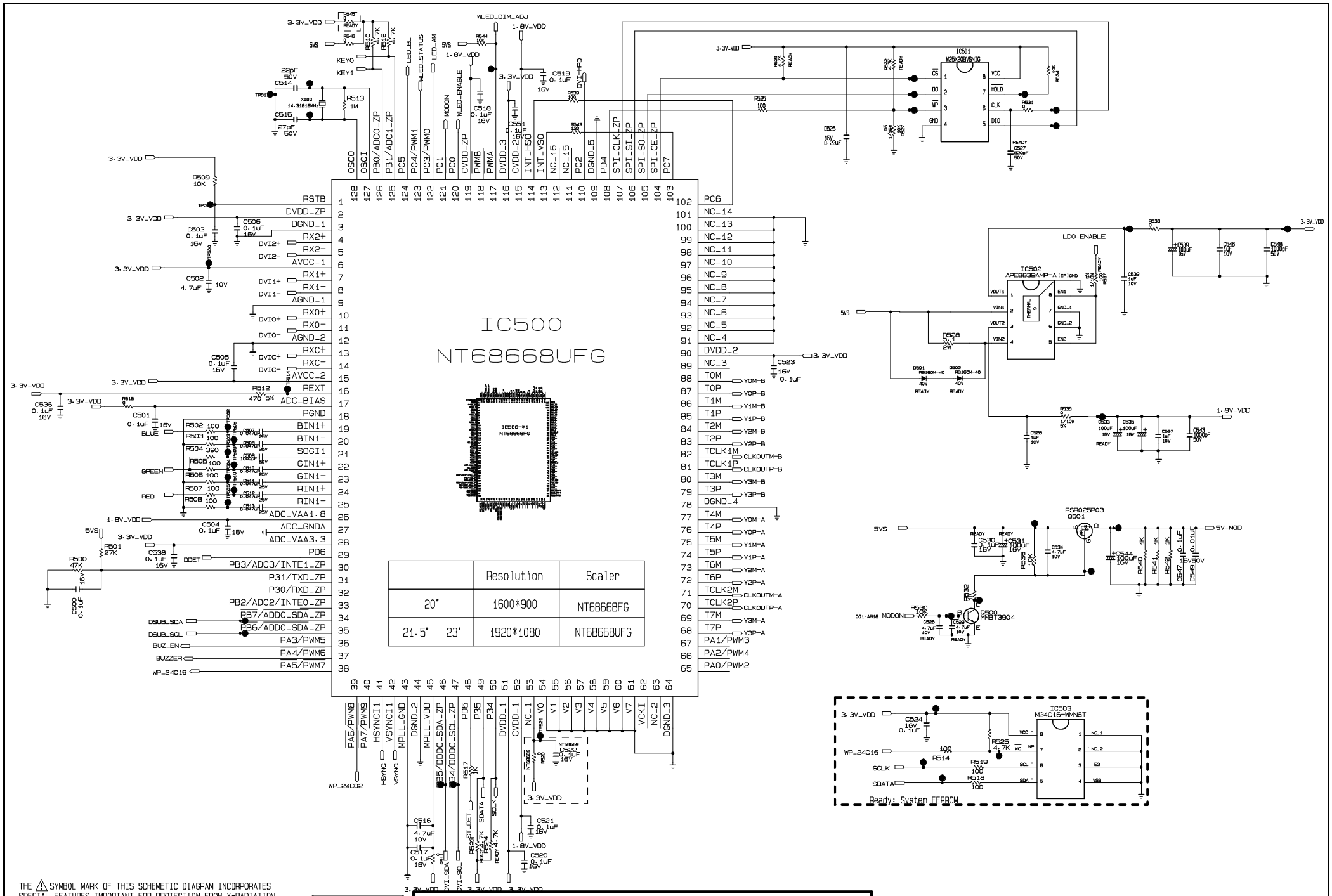

	Resolution	Scaler
20"	1600*900	NT68668FG
21.5" 23"	1920*1080	NT68668UFG

THE ⚠ SYMBOL MARK OF THIS SCHEMETIC DIAGRAM INCORPORATES SPECIAL FEATURES IMPORTANT FOR PROTECTION FROM X-RADIATION, FILRE AND ELECTRICAL SHOCK HAZARDS, WHEN SERVICING IF IS ESSENTIAL THAT ONLY MANUFATURES SPECFIED PARTS BE USED FOR THE CRITICAL COMPONENTS IN THE ⚠ SYMBOL MARK OF THE SCHEMETIC.

SECRET
LGElectronics

LG ELECTRONICS

MODEL	W56 series(Dual)	DATE	2009-10-19
BLOCK	SCALER & POWER	SHEET	1 / 3

PDF created with pdfFactory Pro trial version www.pdffactory.com

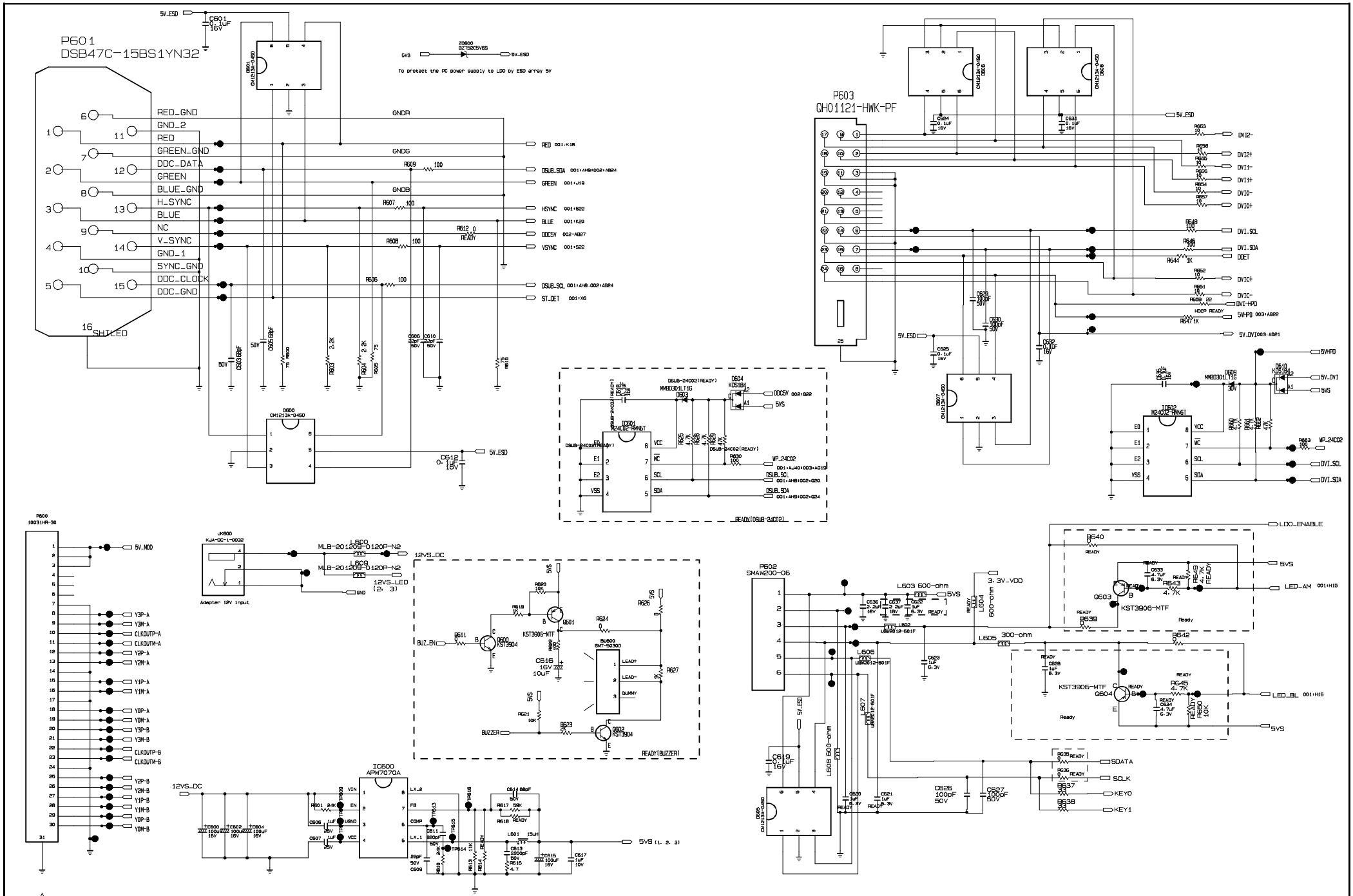

THE ⚠ SYMBOL MARK OF THIS SCHEMETIC DIAGRAM INCORPORATES SPECIAL FEATURES IMPORTANT FOR PROTECTION FROM X-RADIATION, FILRE AND ELECTRICAL SHOCK HAZARDS, WHEN SERVICING IF IS ESSENTIAL THAT ONLY MANUFATURES SPECFIED PARTS BE USED FOR THE CRITICAL COMPONENTS IN THE ⚠ SYMBOL MARK OF THE SCHEMETIC.

SECRET
LGElectronics

LG ELECTRONICS

MODEL	W56 series(Dual)	DATE	2009-10-19
BLOCK	Dual Input/POWER	SHEET	2 / 3

PDF created with pdfFactory Pro trial version www.pdffactory.com

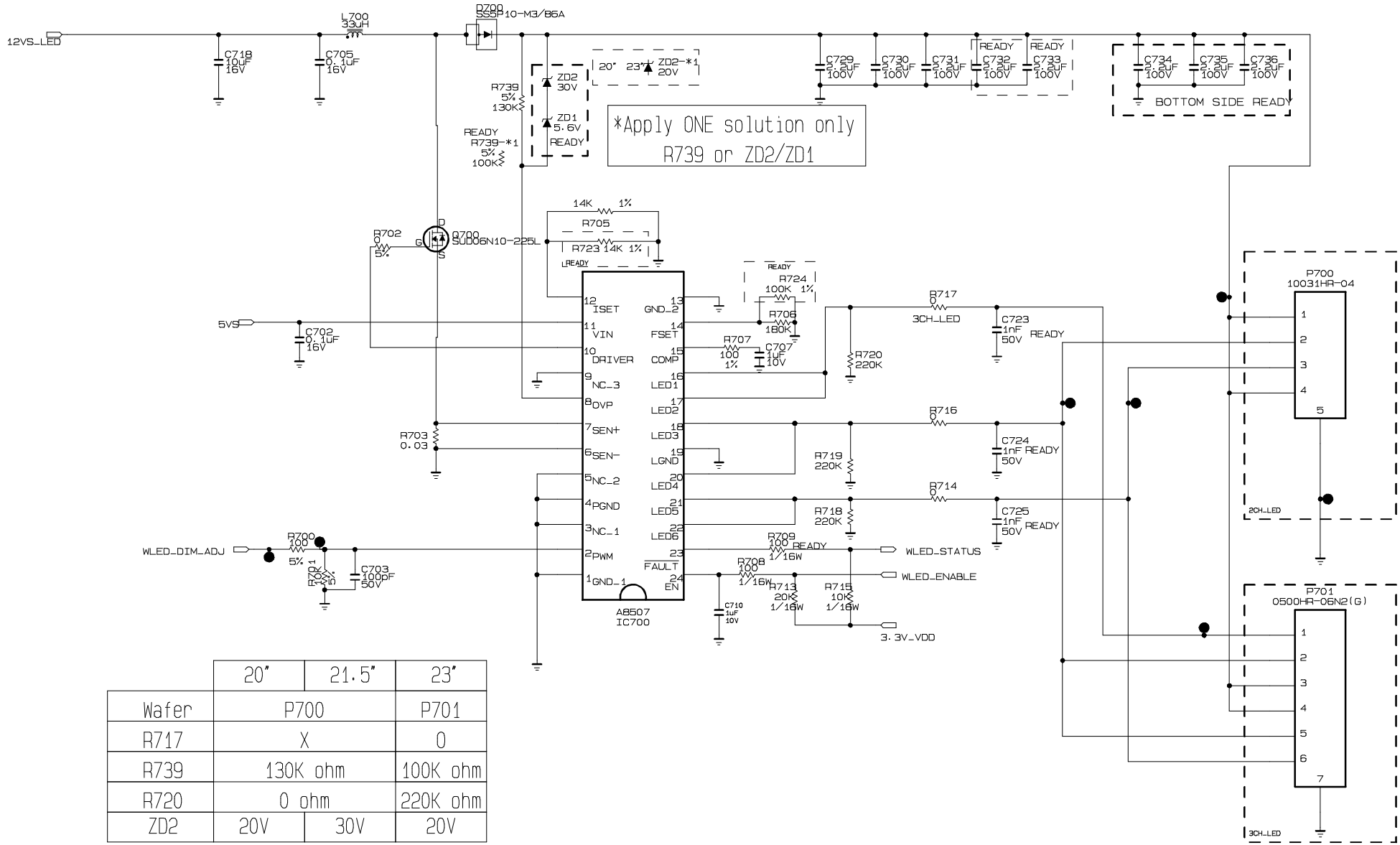

	20"	21.5"	23"
Wafer	P700		P701
R717	X		0
R739	130K ohm		100K ohm
R720	0 ohm		220K ohm
ZD2	20V	30V	20V

THE ⚠ SYMBOL MARK OF THIS SCHEMETIC DIAGRAM INCORPORATES SPECIAL FEATURES IMPORTANT FOR PROTECTION FROM X-RADIATION. FILRE AND ELECTRICAL SHOCK HAZARDS, WHEN SERVICING IF IS ESSENTIAL THAT ONLY MANUFATURES SPECFIED PARTS BE USED FOR THE CRITICAL COMPONENTS IN THE ⚠ SYMBOL MARK OF THE SCHEMETIC.

SECRET
LGElectronics

LG ELECTRONICS

MODEL	E50T series(Dual)	DATE	2009-10-19
BLOCK	LED Driver	SHEET	3 / 3

PDF created with pdfFactory Pro trial version www.pdffactory.com