BLOCK DIAGRAM (CB910)

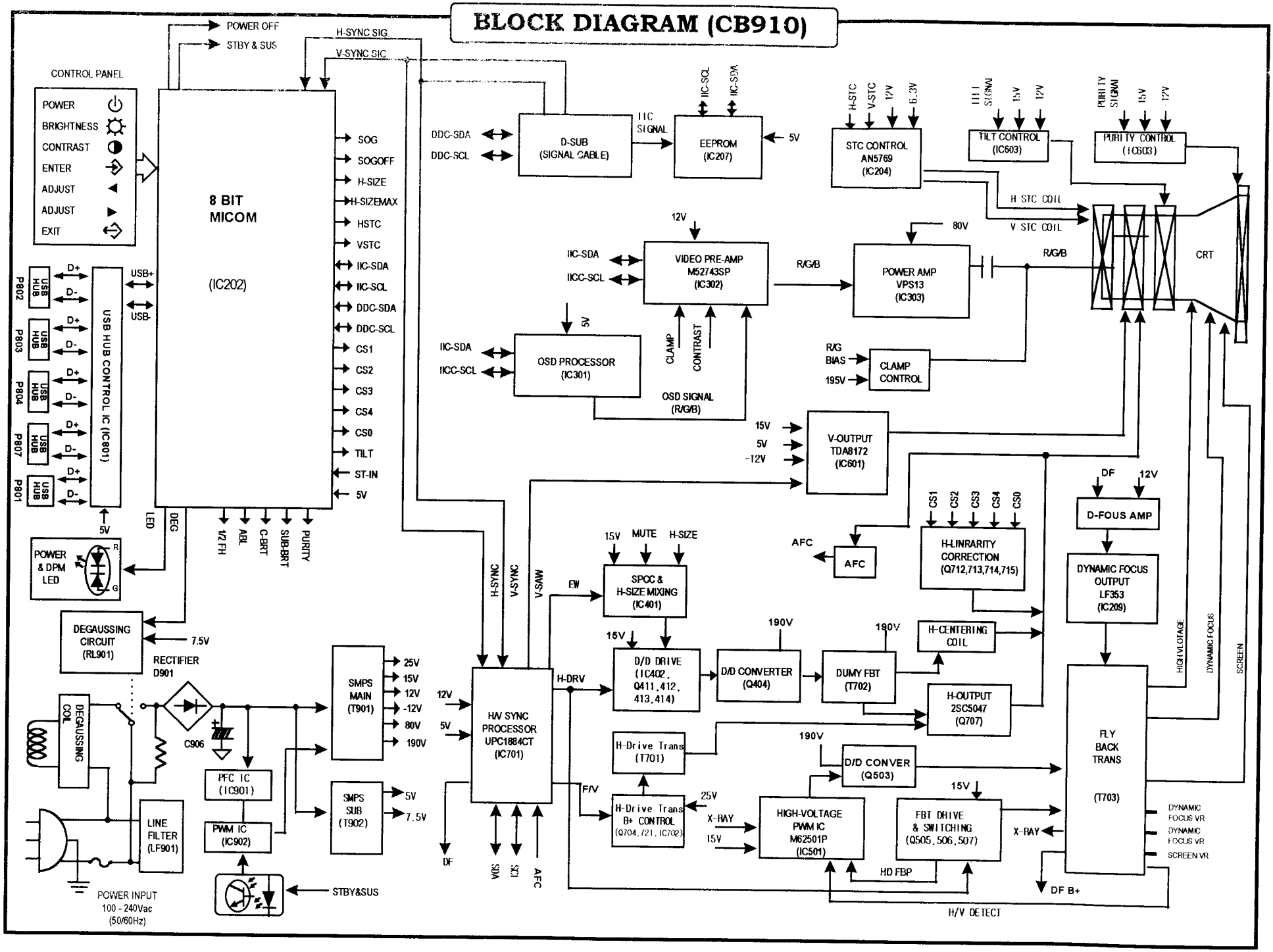

DESCRIPTION OF BLOCK DIAGRAM

1. Line Filter & Associated Circuit

This is used for suppressing noise of power input line flowing into the monitor and/or some noise generated in this monitor flowing out through the power input line. That is to say, this circuit prevents interference between the monitor and other electric appliances.

2. Degauss Circuit & Coil

The Degauss circuit consists of the degaussing coil, the PTC (Positive Temperature Coefficient) thermistor (TH902), and the relay(RL901). This circuit eliminates abnormal color of the screen automatically by degaussing the slot mask in the CRT when turn on the power switch. When you need to degauss while using the monitor select (DEGAUSS) in the OPTION SELECT on the OSD menu.

3. SMPS(Switching Mode Power Supply).

This circuit works with power of 110-240Vac(50/60Hz).

The operation procedure is as follows:

1)AC input voltage is rectified and smoothed by the bridge diode (D901) and the capacitor (C906).

2)The rectified voltage (DC voltage) is applied to the primary coil of the transformer (T901,T902) and PFC IC(IC901).

3)The PFC(Power Factor Correction) IC (IC901) corrects power factor caused by different between current phase and voltage phase.

4)The control IC (IC902) generates switching pulse to turn on and off the primary coil of the transformer (T901) repeatedly.

5)Depending on the turn ratio of the transformer , the secondary voltages appear at the secondary coil of the transformer (T901).

6)These secondary voltages are rectified by each diode (D921,922,924,925,926) and operate the other circuits. (Deflection , Video Amplifier , etc.)

7)The switching IC (IC903) controls input-pulse-width and generates secondary voltages by sub-transformer (T902) .

4. Display Power Management Circuit.

This circuit control power consumption of the monitor by detecting H and V sync signal.

There are Stand-by and suspend mode.

When no horizontal or vertical sync signal input, the circuit consists of Q903 and IC916 becomes stand-by and suspend mode. It's power consumption is below 15W.

5. X-ray Protection.

This circuit detects the rectified DC voltage comes from the FBT pin 4. If the high voltage of the FBT reaches up to about 29kV (abnormal state) , high voltage control PWM IC (IC501) detects it. And PWM IC (IC501) prevent output voltage to the gate of high-voltage-D/D-convert-transistor(Q503) .It stops B+ voltage supplied

to the FBT (T703) , and high voltage is not be generated. (In the normal state, the high voltage is about 26kV.)

6. Micom (Microprocessor) Circuit.

The operating procedure of Micom (Microprocessor) and its associated circuit is as follows:

1)H and V Sync signal is supplied from the D-sub to the Micom (IC202).
2)The Micom (IC202) distinguishes polarity and frequency of H and V sync.
3)The Micom controls each OSD function signals.(H-size, H-position, V-size, etc.)
4)The controlled data of each mode is stored in itself. User can adjust screen condition by each OSD function. The data of the adjust screen condition is stored automatically.

7.Horizontal and Vertical Synchronous Processor

This circuit generates the horizontal drive pulse and the vertical drive pulse by taking sync-signal form the D-SUB (P202). This circuit consists of the UPC1884CT (IC701) and the associated circuit.

8.Oscillating Circuit for D/D Converter.

This circuit generates the saw-tooth wave which has the horizontal period by taking the output of the UPC1884CT (IC701) .

9.D/D (DC to DC) Converter.

This circuit supplies DC voltage to the horizontal deflection output circuit by decreasing DC 190V which is the secondary voltage of the SMPS in accordance with the input horizontal sync signal.

10.Side-Pincushion Correcting Circuit.

This circuit improves the side-pincushion of the screen by mixing east-west wave to the output of the horizontal deflection D/D converter which is used for the supply voltage source (B+) of the deflection circuit.

11.D/D Drive & Convert Circuit.

This circuit is used for supplying B+ voltage to horizontal deflection output transistor(Q707). This circuit makes to add side-pincushion correcting signal to B+ voltage.

12.Horizontal Deflection Output Circuit.

This circuit makes the horizontal deflection by supplying the saw-tooth current to the horizontal deflection yoke.

13.High Voltage Output & FBT (Flyback Transformer).

The high voltage output circuit is used for generating pulse wave to the primary coil of

the FBT (Flyback Transformer (T703)). A boosted voltage (about 26kV) appears at the secondary of the FBT and it is supplied to the anode of the CRT. And there are another output voltages such as the dynamic focus frequency.

14.H-Linearity Correction Circuit.

This circuit corrects the horizontal linearity for each horizontal sync frequency.

15.H-Raster Centering Circuit.

This circuit makes the back raster stay in the center of the screen by selecting the switch(SC701)

16.Vertical Output Circuit.

This circuit takes the vertical ramp wave form the UPC1884CT (IC701) and performs the vertical deflection by supplying the saw-tooth wave current form the TDA8172 (IC601) to the vertical deflection yoke.

17.Dynamic Focus Output circuit.

This circuit takes H and V parabola wave from the UPC1884CT(IC701) and amplifies these waves to offer to the FBT(T703).

18.H & V Blanking and Brightness Control.

This circuit eliminates the retrace line by supplying a negative pulse to the G1 of the CRT. The brightness control circuit is used to control of the screen brightness by changing the DC level of G1.

19.Image Rotation (Tilt) Circuit.

This circuit corrects the tilt of the screen by supplying the image rotation signal to the tilt coil which is attached to the CRT near the deflection.

20. Earth Magnetic Correction (Purity) Circuit.

This circuit corrects the purity of the screen by supplying the purity signal to the purity coil which is attached to the CRT near the front.

21.Static Convergence Control Circuit.

This circuit corrects the convergence of the screen by supplying the convergence signal to the 4H(STC) coil which is attached to the CRT near the deflection.

22.Moiré Reduction Circuit.

This circuit reduce interference between the periodical display pattern and the CRT's slot (or dot). The positions of every other one dot video signal beams (red, green and blue beam) are shifted finely, thus reducing interference.

DESCRIPTION OF BLOCK DIAGRAM

23.OSD Circuit.

This circuit is used for performing the OSD (On Screen Display) function. When a user selects the OSD Select/ Adjustment control, the adjustment status displays on the screen.

24.Video Pre-Amp Circuit.

This circuit amplifies the analog video signal from 0-0.7V to 0-4V. This circuit is operated by taking the clamp, R, G, B drives, and contrast signals from the Micom (IC202).

25.Video Output Amp Circuit.

This circuit amplifies the video signal which comes from the video pre-amp circuit and amplified video signal is applied to the CRT cathode.