APPENDIX C. Block Diagram / Schematics

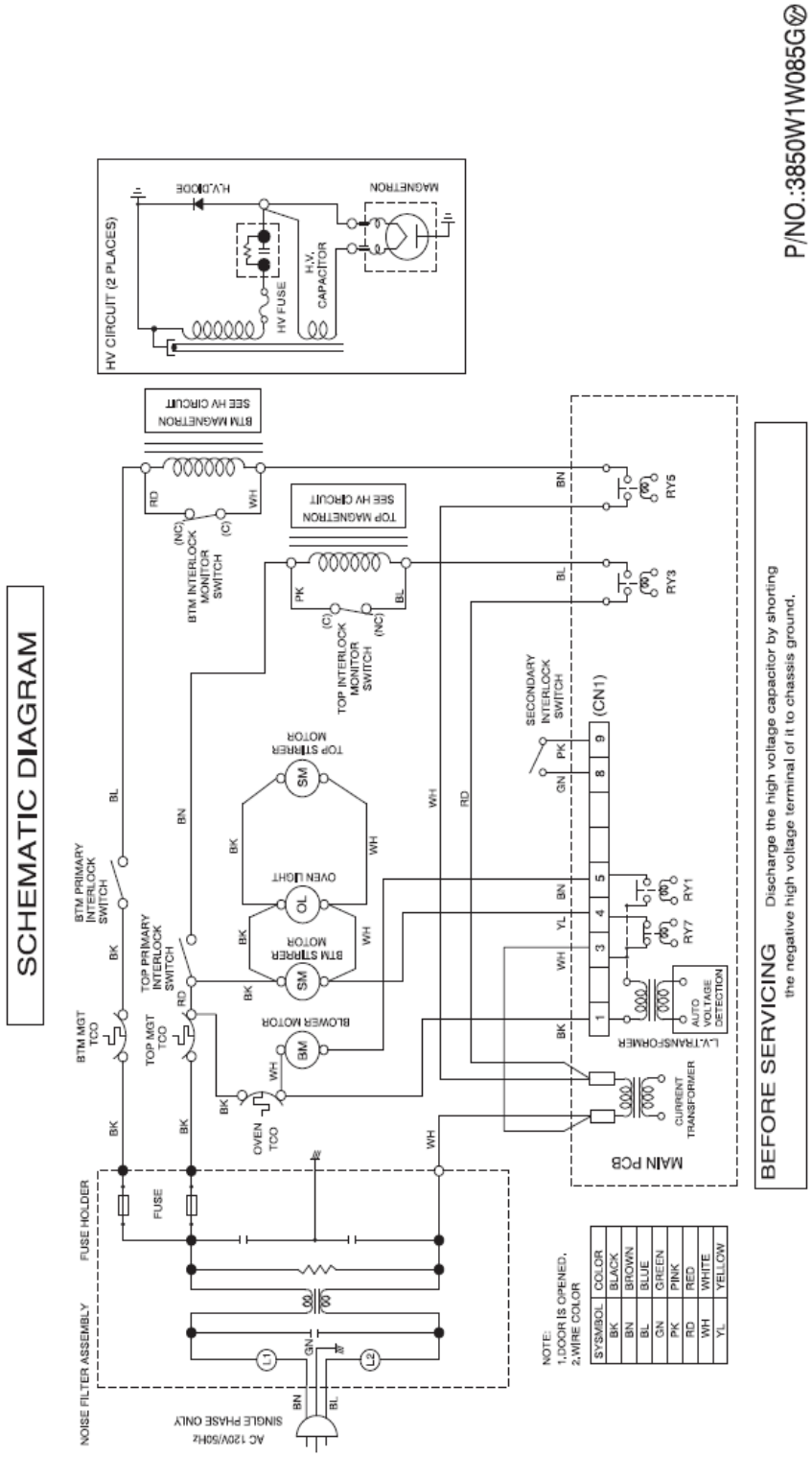

<Fig. 3. Schematic Diagram>