APPENDIX C. Block Diagram / Schematics

Model No.: MM-624AMZ
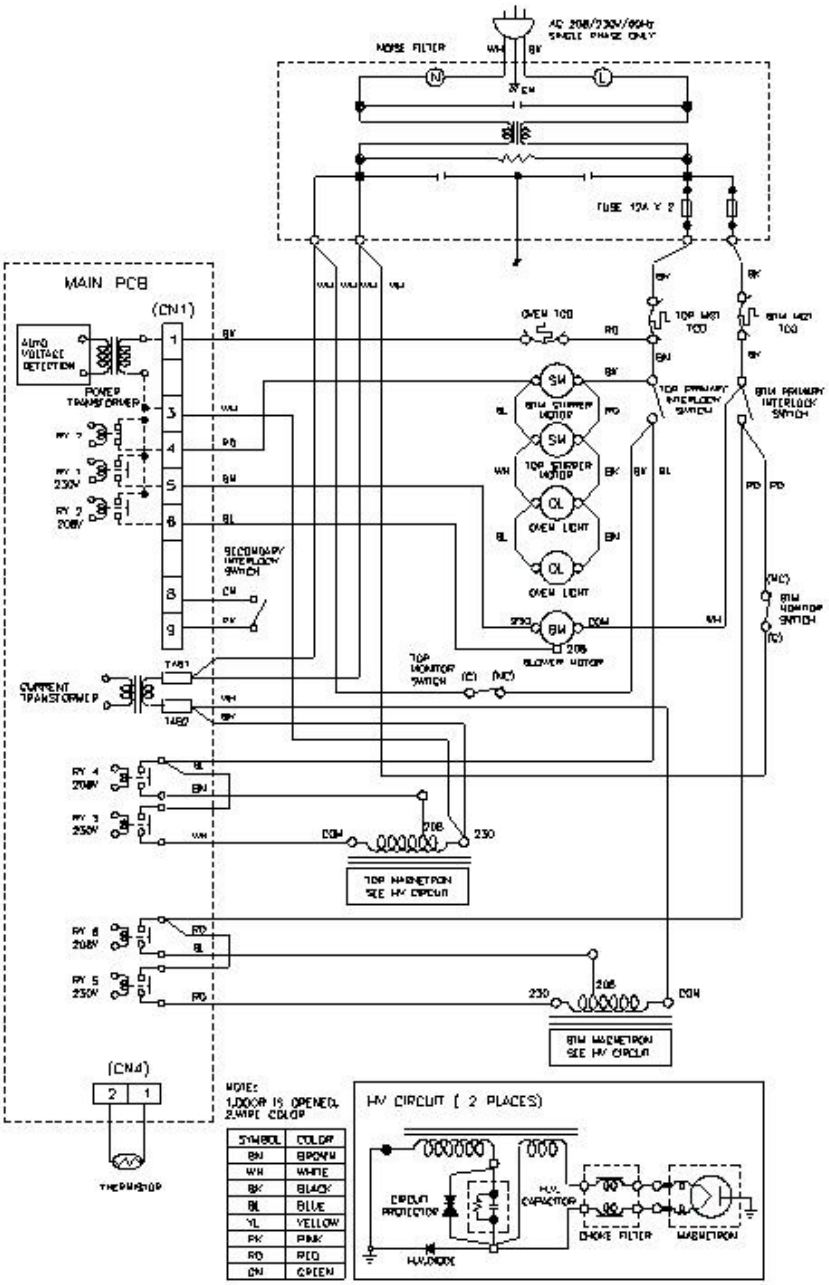
FCC ID: BEJC620ZK