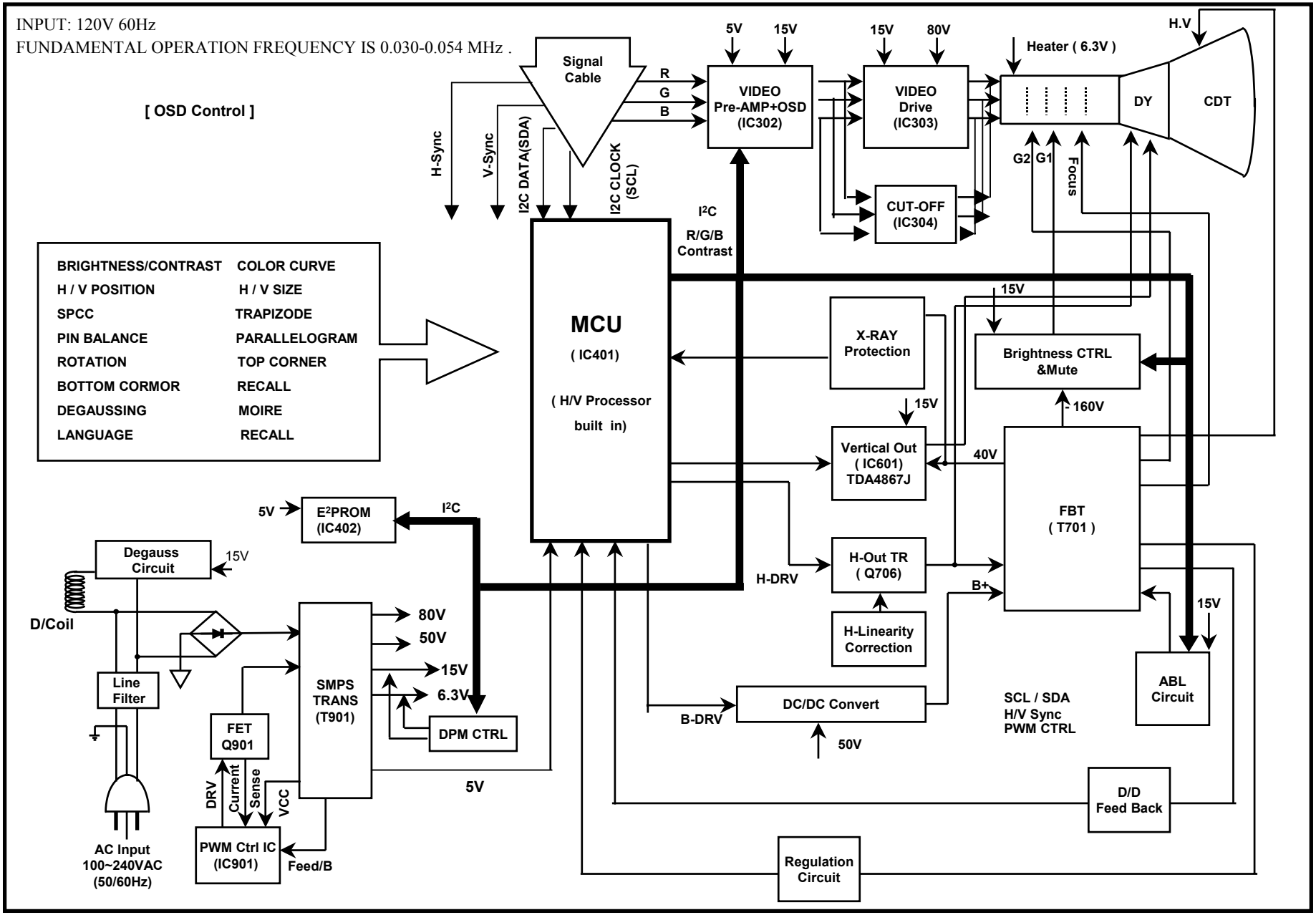# C15LA-* BLOCK DIAGRAM