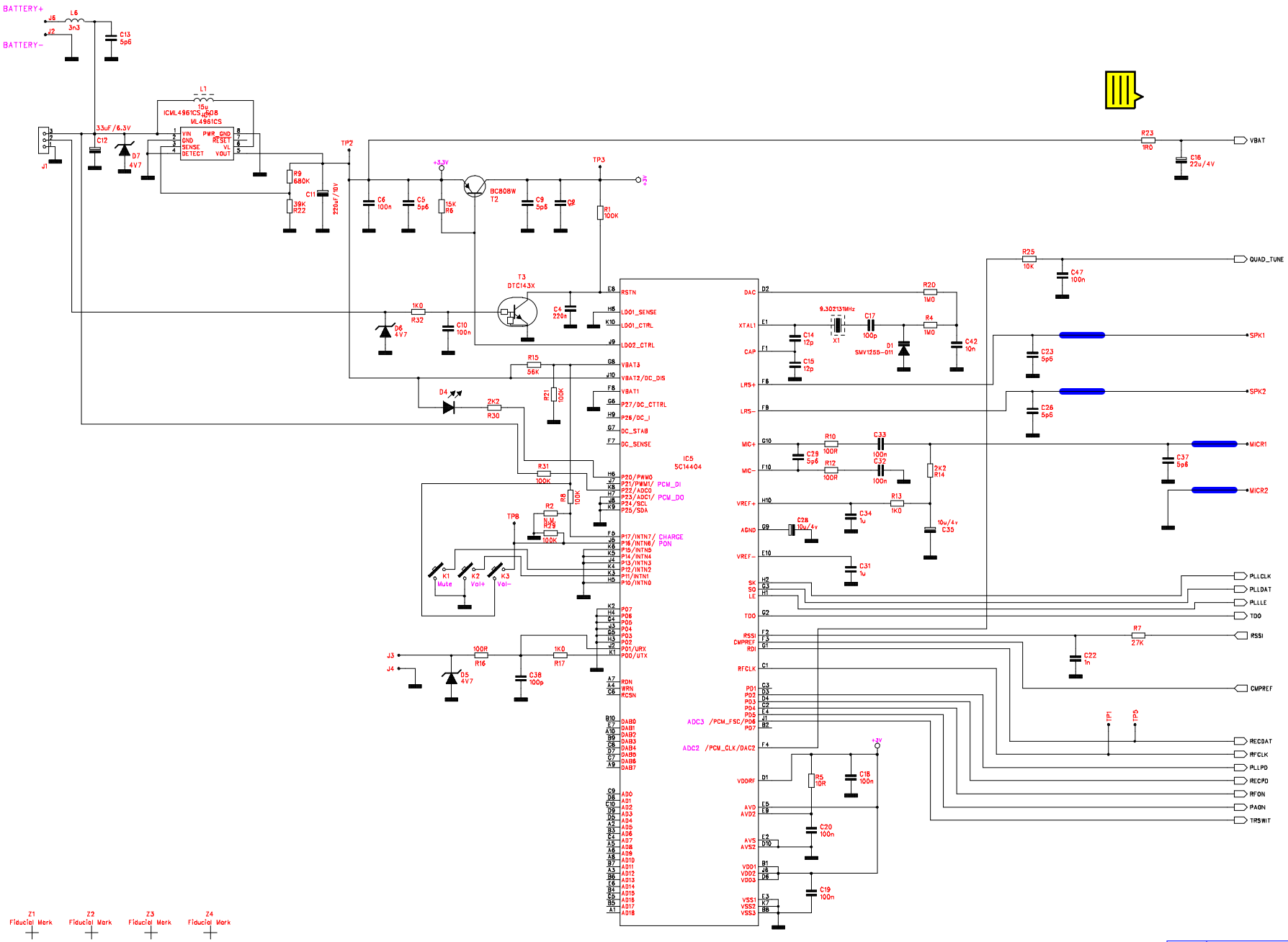

PROJECT	Active 2G4		VER	2
TITLE	Logic Part		REV	C
DATE	000511	REF JNL		
FILENAME	.			
SHEET OF SHEETS	1/2			

RTX

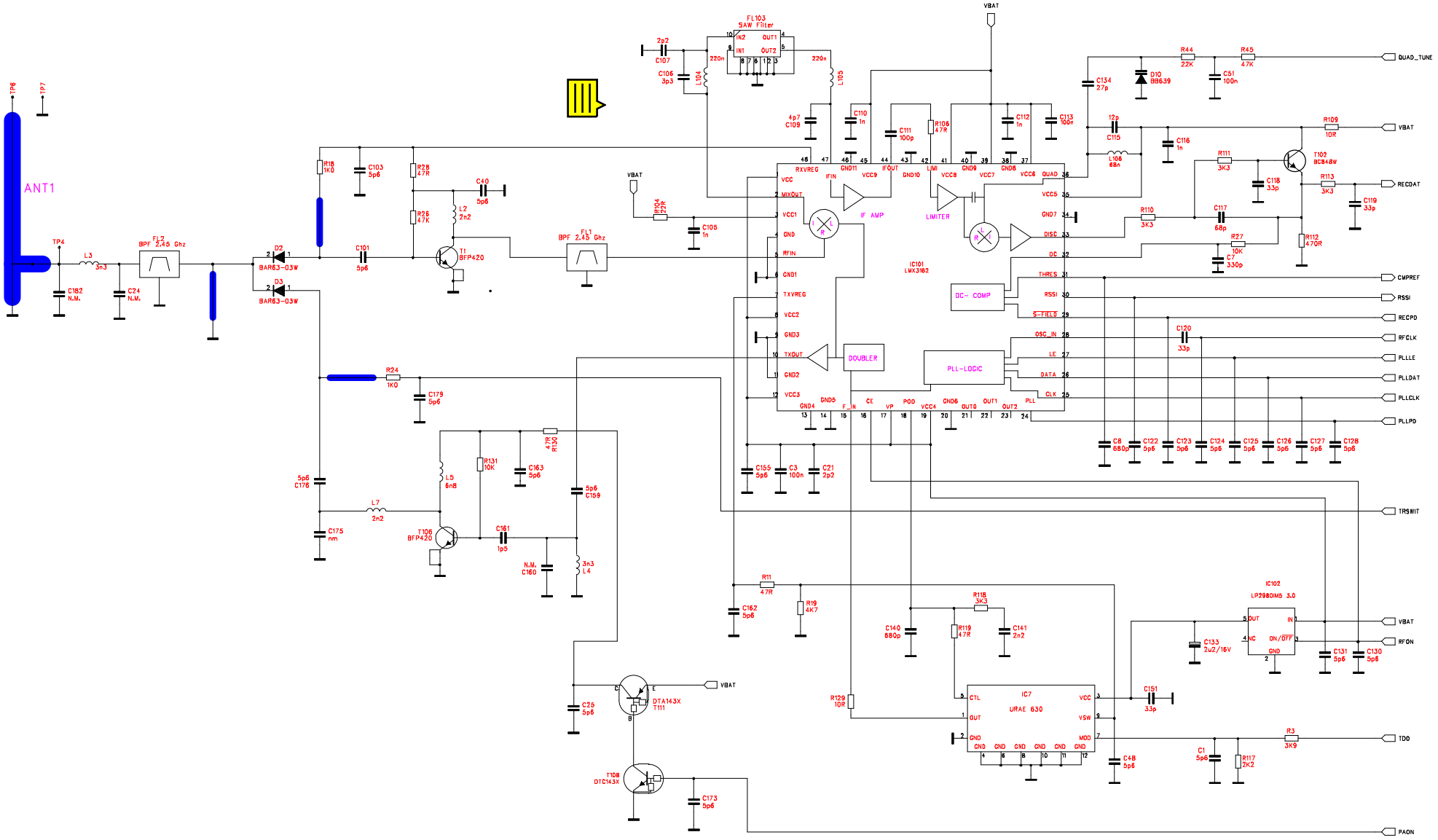

PROJECT	Active 2G4	VER	2
TITLE	RF part	REV	C
DATE	000511	REF	JNL
FILENAME	.		
SHEET OF SHEETS	2/2		

RTX