2 Flow chart for the Base station.
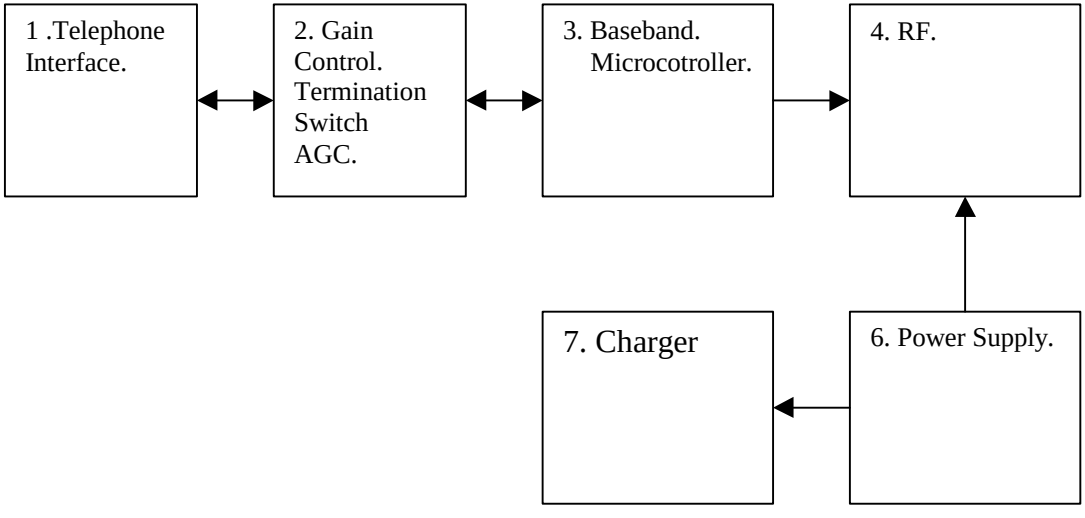
This document describes the design of the Base station.