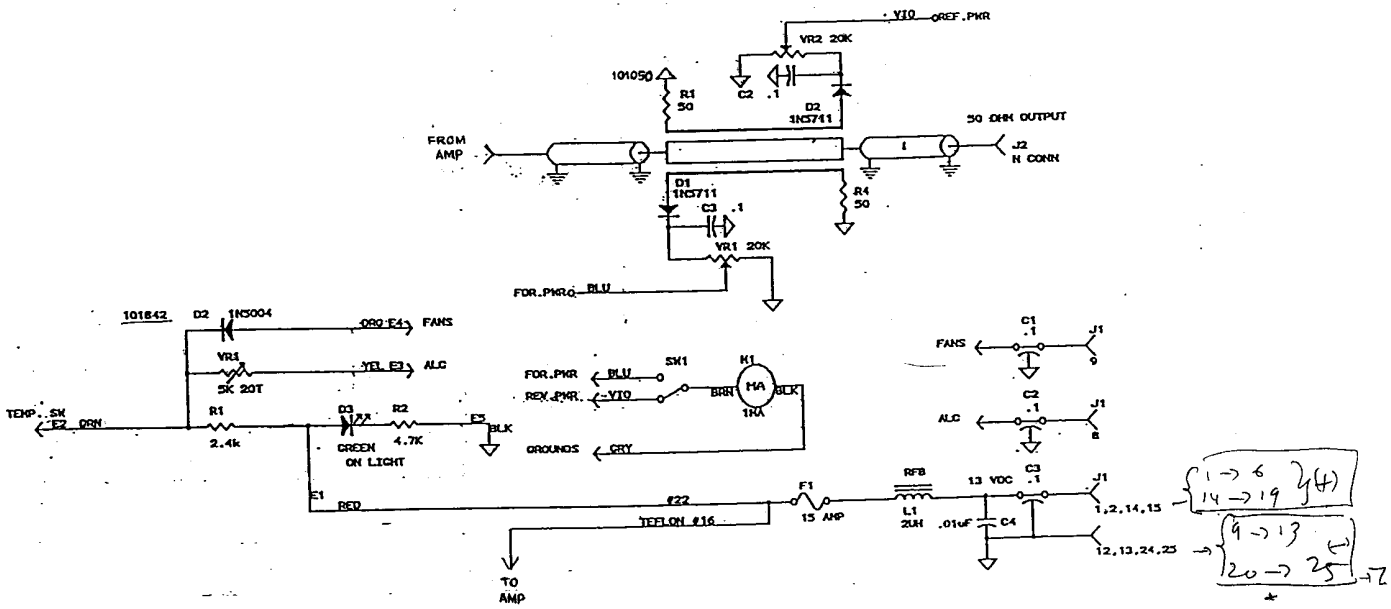
VIO
REF.PKR
VR2 20K
101050
R1
50
C2 .1
D2
1N5711
50 OHM OUTPUT
FROM
AMP
J2
N CONN
D1
1N5711
C3 .1
R4
50
VR1 20K
FOR.PKR
BLU
101842
D2 1N5004
ORG E4
FANS
VR1
5K 20T
YEL E3
ALC
TEMP. SW
E2 ORN
R1
2.4k
D3
GREEN
ON LIGHT
R2
4.7K
E5
BLK
FOR.PKR
BLU
REV.PKR
VIO
SW1
M1
MA
1MA
BRN
BLK
GROUNDS
GRY
E1
RED
#22
TEFLON #16
TO
AMP
F1
15 AMP
RFB
L1
2UH
.01uF
C4
13 VDC
C3
.1
J1
1,2,14,15
12,13,24,25
FANS
C1
.1
J1
ALC
C2
.1
J1
1 → 6
14 → 19
9 → 13
20 → 25

8