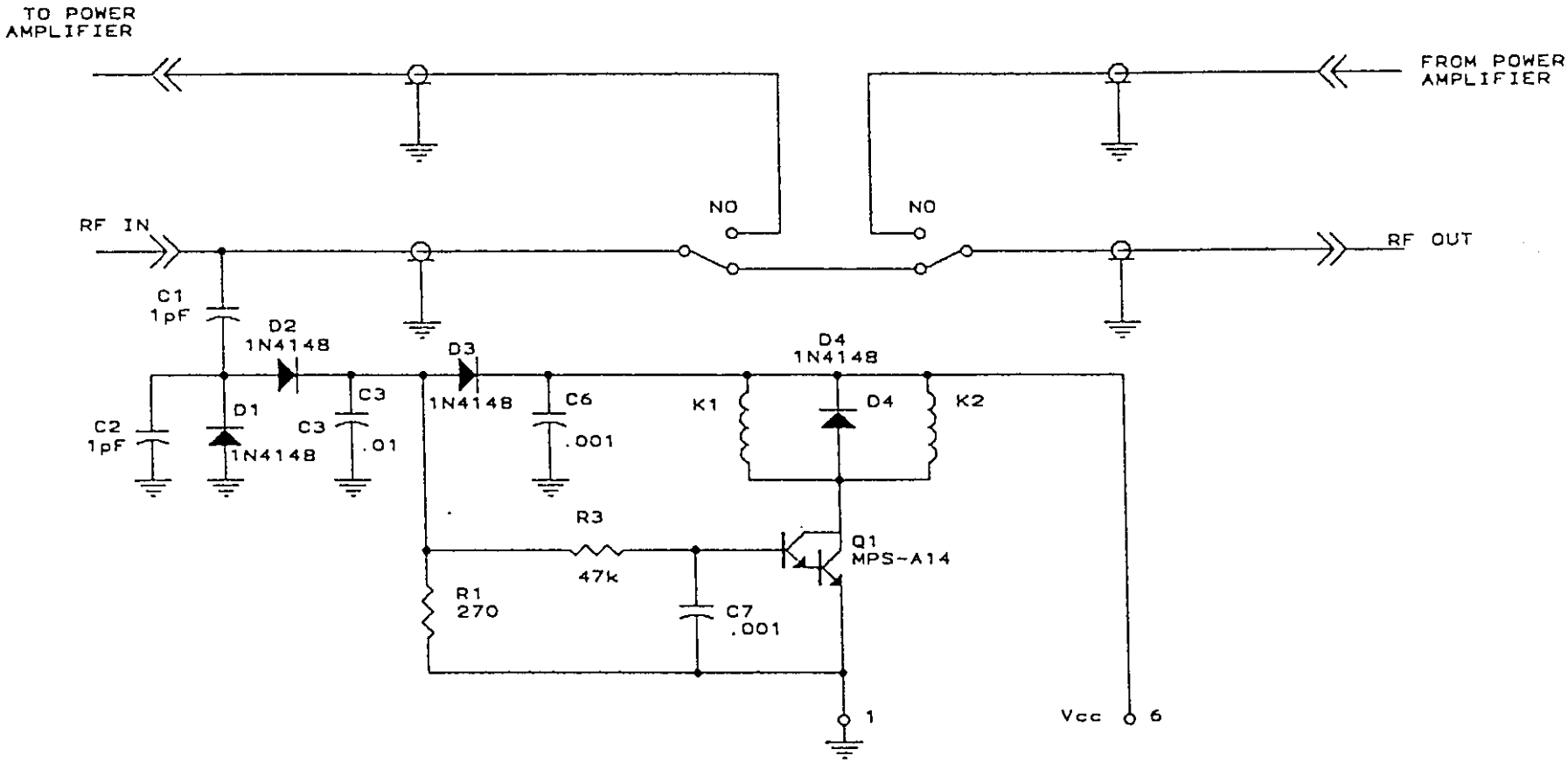

3AIRCOR.SCH

Title GENERAL PURPOSE CARRIER OPERATED RELAY		
Size A	Document Number 100817	REV B
Date: November 12, 1998	Sheet of	

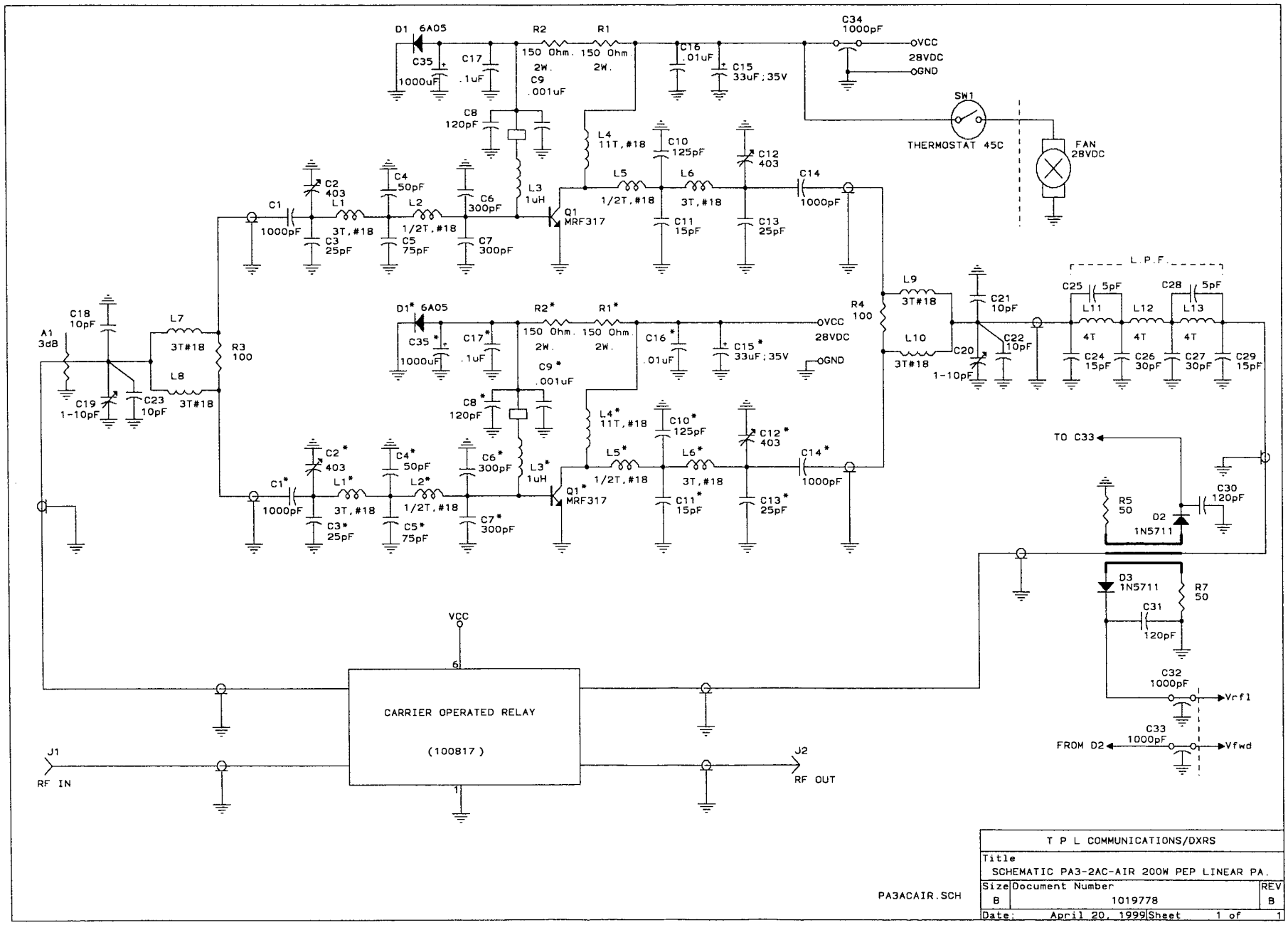

PA3ACAIR.SCH

T P L COMMUNICATIONS/DXRS		
Title SCHEMATIC PA3-2AC-AIR 200W PEP LINEAR PA.		
Size B	Document Number 1019778	REV B
Date: April 20, 1999	Sheet 1 of 1	