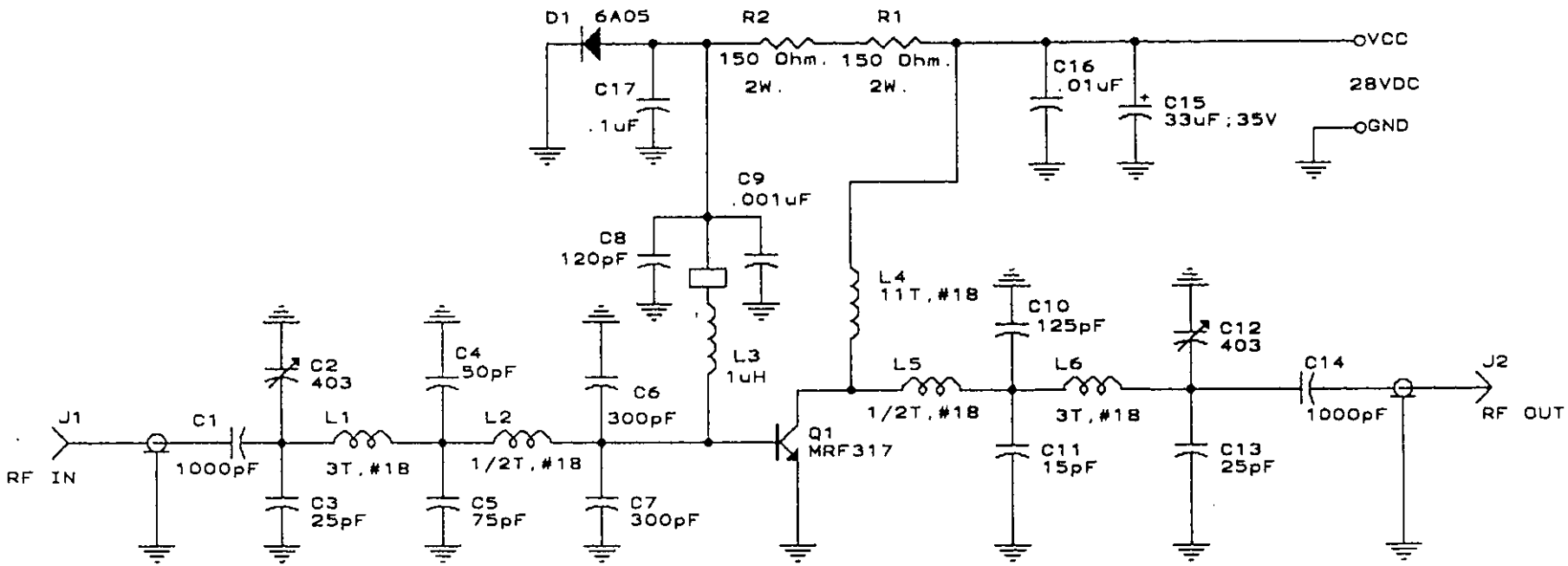

T P L COMMUNICATIONS/DXRS		
Title SCHEMATIC PA3-2-AB-AIR LINEAR PA.		
Size A	Document Number 101977	REV
Date: June 7, 1996	Sheet 1 of 1	

PA3AIR.SCH