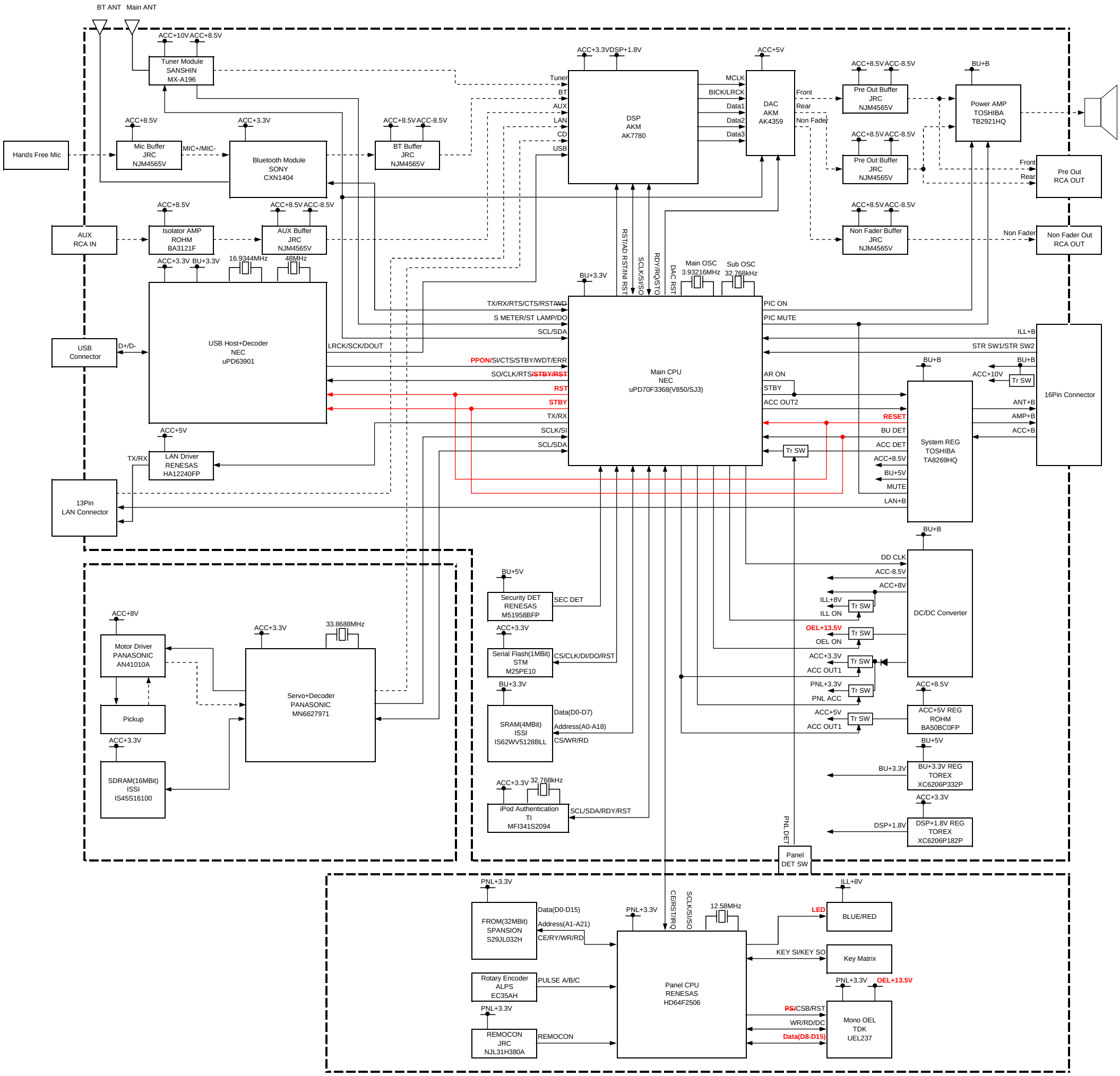09MY Overseas Marketing CDT-Mid Block Diagram