FCC SAR Test Report

APPLICANT	:	Hewlett-Packard Company
EQUIPMENT	:	Notebook PC
BRAND NAME	:	HP
MODEL NAME	:	HSTNN-W91C
FCC ID	:	B94HNW91CERTS
STANDARD	:	FCC 47 CFR Part 2 (2.1093) ANSI/IEEE C95.1-1992 IEEE 1528-2003 FCC OET Bulletin 65 Supplement C (Edition 01-01)

The product was completely tested on Dec. 15, 2012. We, SPORTON INTERNATIONAL INC., would like to declare that the tested sample has been evaluated in accordance with the procedures and shown the compliance with the applicable technical standards.

The test results in this report apply exclusively to the tested model / sample. Without written approval of SPORTON INTERNATIONAL INC., the test report shall not be reproduced except in full.

Reviewed by:

Jones Tsai

Jones Tsai / Manager

Testing Laboratory
1190

SPORTON INTERNATIONAL INC.
No. 52, Hwa Ya 1st Rd., Hwa Ya Technology Park, Kwei-Shan Hsiang, Tao Yuan Hsien, Taiwan, R.O.C.

Table of Contents

1. Statement of Compliance **4**
2. Administration Data **5**
2.1 Testing Laboratory 5
2.2 Applicant 5
2.3 Manufacturer 5
2.4 Application Details 5
3. General Information **6**
3.1 Description of Equipment Under Test (EUT) 6
3.2 Maximum RF output power among production units 7
3.3 Product Photos 8
3.4 Applied Standard 8
3.5 Device Category and SAR Limits 8
3.6 Test Conditions 8
4. Specific Absorption Rate (SAR) **11**
4.1 Introduction 11
4.2 SAR Definition 11
5. SAR Measurement System **12**
5.1 E-Field Probe 13
5.2 Data Acquisition Electronics (DAE) 13
5.3 Robot 14
5.4 Measurement Server 14
5.5 Phantom 15
5.6 Device Holder 16
5.7 Data Storage and Evaluation 17
5.8 Test Equipment List 19
6. Tissue Simulating Liquids **20**
7. SAR System Validation **21**
7.1 Purpose of System Performance check 21
7.2 System Setup 21
7.3 SAR System Verification Results 22
8. EUT Testing Position **22**
9. Measurement Procedures **23**
9.1 Spatial Peak SAR Evaluation 23
9.2 Area & Zoom Scan Procedures 24
9.3 Volume Scan Procedures 25
9.4 SAR Averaged Methods 25
9.5 Power Drift Monitoring 25
10. Exposure Position Consideration **26**
11. Conducted RF Output Power (Unit: dBm) **29**
12. SAR Test Results **35**
12.1 Test Records for Body SAR Test 35
12.2 Repeated SAR Measurement 37
12.3 Highest SAR Plot 38
12.4 Simultaneous Transmission SAR Analysis and Measurements 43
12.5 Simultaneous analysis – SPLSR calculation 49
13. Uncertainty Assessment **50**
14. References **52**

Appendix A. Plots of System Performance Check
Appendix B. Plots of SAR Measurement
Appendix C. DASY Calibration Certificate
Appendix D. Product Photos
Appendix E. Test Setup Photos

Revision History

REPORT NO.	VERSION	DESCRIPTION	ISSUED DATE
FA2N2103-02	Rev. 01	Initial issue of report	Jan. 07, 2013

1. Statement of Compliance

The maximum results of Specific Absorption Rate (SAR) found during testing for **Hewlett-Packard Company, HSTNN-W91C**, are as follows.

<Highest Reported SAR>

Exposure Position	Frequency Band	Highest Reported 1g-SAR (W/kg)	Equipment Class	Highest Reported 1g-SAR (W/kg)
Body (0cm gap)	GSM850	**1.44**	PCB	**1.44**
Body (0cm gap)	GSM1900	**1.41**		
Body (0cm gap)	WCDMA Band V	**1.36**		
Body (0cm gap)	WCDMA Band II	**1.39**		

<Highest Reported Simultaneous Transmission SAR>

Frequency Band	Equipment Class	Exposure Position	Highest Reported Simultaneous Transmission 1g-SAR (W/kg)
GSM850	PCB	Edge 3 (0 cm Gap)	1.44
Bluetooth 2.4GHz	DSS		

Frequency Band	Equipment Class	Exposure Position	Highest Reported Simultaneous Transmission 1g-SAR (W/kg)
WCDMA II	PCB	Edge 4 (0 cm Gap)	1.58
WLAN 2.4GHz	DTS		

Remark:

The highest simultaneous transmission reported SAR is scalar SAR summation per FCC KDB 690783 D01 v01r02. Simultaneous transmission SAR measurement is exempted according to the SPLSR analysis per KDB 447498 D01v05

This device is in compliance with Specific Absorption Rate (SAR) for general population/uncontrolled exposure limits (1.6 W/kg) specified in FCC 47 CFR part 2 (2.1093) and ANSI/IEEE C95.1-1992, and had been tested in accordance with the measurement methods and procedures specified in IEEE 1528-2003 and FCC OET Bulletin 65 Supplement C (Edition 01-01).

2. Administration Data

2.1 Testing Laboratory

Test Site	SPORTON INTERNATIONAL INC.
Test Site Location	No. 52, Hwa Ya 1st Rd., Hwa Ya Technology Park, Kwei-Shan Hsiang, Tao Yuan Hsien, Taiwan, R.O.C. TEL: +886-3-327-3456 FAX: +886-3-328-4978

2.2 Applicant

Company Name	Hewlett-Packard Company
Address	3000 Hanover Street, Palo Alto, California 94304, USA

2.3 Manufacturer

Company Name	Wistron Corporation
Address	21F., No. 88, Sec. 1, Xintai 5th Rd., Xizhi Dist., New Taipei City 22181, Taiwan (R. O. C.)

2.4 Application Details

Date of Start during the Test	Dec. 14, 2012
Date of End during the Test	Dec. 15, 2012

3. General Information

3.1 Description of Equipment Under Test (EUT)

Product Feature & Specification	
EUT	Notebook PC
Brand Name	HP
Model Name	HSTNN-W91C
FCC ID	B94HNW91CERTS
Tx Frequency	GSM850: 824.2 MHz ~ 848.8 MHz GSM1900: 1850.2 MHz ~ 1909.8 MHz WCDMA Band V: 826.4 MHz ~ 846.6 MHz WCDMA Band II: 1852.4 MHz ~ 1907.6 MHz NFC: 13.56MHz
Antenna Type	PIFA Antenna
Uplink Modulations	GPRS: GMSK EDGE: GMSK / 8PSK WCDMA (Rel 99): QPSK HSDPA (Rel 6): QPSK HSUPA (Rel 6): QPSK NFC: ASK
EUT Stage	Identical Prototype
Remark: 1. Voice call over circuit-switched domain of WWAN is not supported 2. The above EUT's information was declared by manufacturer. Please refer to the specifications or user's manual for more detailed description.	

3.2 Maximum RF output power among production units

Band	GSM 850 Average power (dBm)		GSM 1900 Average power (dBm)	
Output Power Status	Normal	Reduced	Normal	Reduced
GPRS/EDGE (GMSK, 1 Tx slot)	33	29	30	25
GPRS/EDGE (GMSK, 2 Tx slots)	33	29	30	25
EDGE (8PSK, 1 Tx slot)	28	28	27	25
EDGE (8PSK, 2 Tx slots)	28	28	27	25

Band	WCDMA Band V Average power (dBm)		WCDMA Band II Average power (dBm)	
Output Power Status	Normal	Reduced	Normal	Reduced
RMC 12.2K	24	22	24	20
HSDPA Subtest-1	24	22	24	20
HSUPA Subtest-5	24	22	24	20

Remark:

By design, HSPA RF output power will never exceed R99 maximum output power, detailed information is included in "tune-up procedure" exhibit

3.3 Product Photos

Please refer to Appendix D.

3.4 Applied Standard

The Specific Absorption Rate (SAR) testing specification, method, and procedure for this device is in accordance with the following standards:

- FCC 47 CFR Part 2 (2.1093)
- ANSI/IEEE C95.1-1992
- IEEE 1528-2003
- FCC OET Bulletin 65 Supplement C (Edition 01-01)
- FCC KDB 447498 D01 v05
- FCC KDB 616217 D04 v01
- FCC KDB 941225 D01 v02
- FCC KDB 941225 D03 v01

3.5 Device Category and SAR Limits

This device belongs to portable device category because its radiating structure is allowed to be used within 20 centimeters of the body of the user. Limit for General Population/Uncontrolled exposure should be applied for this device, it is 1.6 W/kg as averaged over any 1 gram of tissue.

3.6 Test Conditions

3.6.1 Ambient Condition

Ambient Temperature	20 to 24 ℃
Humidity	< 60 %

3.6.2 Test Configuration

For WWAN SAR testing, the device was controlled by using a base station emulator. Communication between the device and the emulator was established by air link. The distance between the EUT and the antenna of the emulator is larger than 50 cm and the output power radiated from the emulator antenna is at least 30 dB smaller than the output power of EUT.

The EUT was set from the emulator to radiate maximum WWAN output power during all tests. For Bottom-Face testing at 0cm separation, the proximity sensor will activate the power reduction and the maximum power is limited at the pre-defined level implemented in this device.

Power reduction applied for each wireless mode and orientation

Exposure Position / wireless mode	Bottom Face(1)	Edge 1	Edge 2	Edge 3(2)	Edge 4(2)
GSM850 GPRS (GMSK 1 Tx slot) - CS1	4 dB	0dB	0dB	4 dB	4 dB
GSM850 GPRS (GMSK 2 Tx slot) - CS1	4 dB	0dB	0dB	4 dB	4 dB
GSM850 EDGE (8PSK 1 Tx slot) - MCS5	0 dB	0 dB	0 dB	0 dB	0 dB
GSM850 EDGE (8PSK 2 Tx slot) - MCS5	0 dB	0 dB	0 dB	0 dB	0 dB
GSM1900 GPRS (GMSK 1 Tx slot) - CS1	5 db	0 dB	0 dB	5 db	5 db
GSM1900 GPRS (GMSK 2 Tx slot) - CS1	5 dB	0 dB	0 dB	5 dB	5 dB
GSM1900 EDGE (8PSK 1 Tx slot) - MCS5	2 dB	0 dB	0dB	2 dB	2 dB
GSM1900 EDGE (8PSK 2 Tx slot) - MCS5	2 dB	0 dB	0 dB	2 dB	2 dB
WCDMA Band V	2 dB	0 dB	0 dB	2 dB	2 dB
WCDMA Band II	4 dB	0 dB	0 dB	4 dB	4 dB

Remark:

1. (1): Reduced maximum limit applied by activation of proximity sensor.
2. (2): Reduced maximum limit applied by activation of screen orientation.
3. Power reduction is not applicable for WiFi and Bluetooth.

Measurement on EUT:

Band/Mode	Ch #	Measured power reduction (dBm)		Reduction Levels
		w/o power back-off	w/ power back-off	(dB)
GSM850 GPRS (GMSK 1 Tx slot) - CS1	189	32.81	28.33	4.48
GSM850 GPRS (GMSK 2 Tx slot) - CS1	189	32.75	28.31	4.44
GSM850 EDGE (8PSK 1 Tx slot) - MCS5	189	26.98	26.98	0.00
GSM850 EDGE (8PSK 2 Tx slot) - MCS5	189	26.93	26.93	0.00
GSM1900 GPRS (GMSK 1 Tx slot) - CS1	661	29.57	24.73	4.84
GSM1900 GPRS (GMSK 2 Tx slot) - CS1	661	29.54	24.72	4.82
GSM1900 EDGE (8PSK 1 Tx slot) - MCS5	661	26.41	24.57	1.84
GSM1900 EDGE (8PSK 2 Tx slot) - MCS5	661	26.40	24.53	1.87
WCDMA Band 5 (RMC 12.2Kbps)	4182	23.50	21.41	2.09
WCDMA Band 2 (RMC 12.2Kbps)	9400	23.56	19.60	3.96

Proximity Sensor for Bottom Face detection

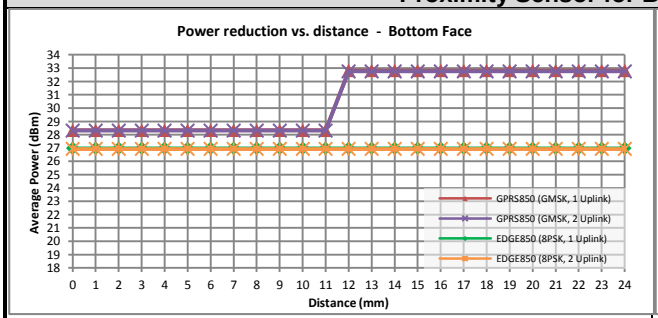

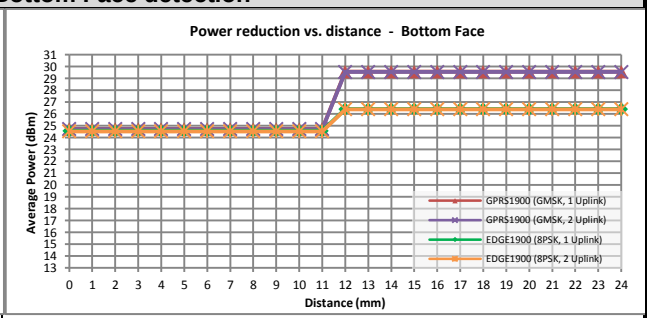

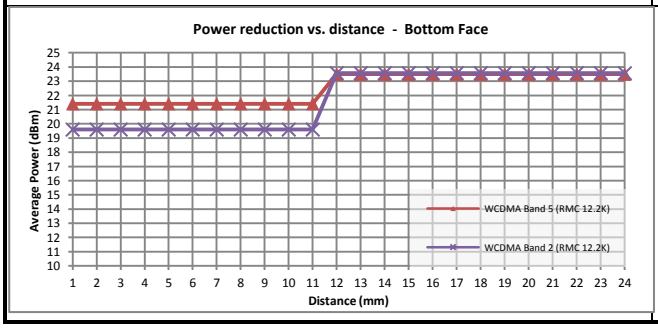

4. Specific Absorption Rate (SAR)

4.1 Introduction

SAR is related to the rate at which energy is absorbed per unit mass in an object exposed to a radio field. The SAR distribution in a biological body is complicated and is usually carried out by experimental techniques or numerical modeling. The standard recommends limits for two tiers of groups, occupational/controlled and general population/uncontrolled, based on a person's awareness and ability to exercise control over his or her exposure. In general, occupational/controlled exposure limits are higher than the limits for general population/uncontrolled.

4.2 SAR Definition

The SAR definition is the time derivative (rate) of the incremental energy (dW) absorbed by (dissipated in) an incremental mass (dm) contained in a volume element (dv) of a given density (ρ). The equation description is as below:

$$\mathbf{SAR} = \frac{\mathbf{d}}{\mathbf{dt}}\left(\frac{\mathbf{dW}}{\mathbf{dm}}\right) = \frac{\mathbf{d}}{\mathbf{dt}}\left(\frac{\mathbf{dW}}{\boldsymbol{\rho}\mathbf{dv}}\right)$$

SAR is expressed in units of Watts per kilogram (W/kg)

SAR measurement can be either related to the temperature elevation in tissue by

$$\mathbf{SAR} = \mathbf{C}\left(\frac{\boldsymbol{\delta}\mathbf{T}}{\boldsymbol{\delta}\mathbf{t}}\right)$$

Where: C is the specific heat capacity, δT is the temperature rise and δt is the exposure duration, or related to the electrical field in the tissue by

$$\mathbf{SAR} = \frac{\boldsymbol{\sigma}|\mathbf{E}|^2}{\boldsymbol{\rho}}$$

Where: σ is the conductivity of the tissue, ρ is the mass density of the tissue and E is the RMS electrical field strength.

However for evaluating SAR of low power transmitter, electrical field measurement is typically applied.

5. SAR Measurement System

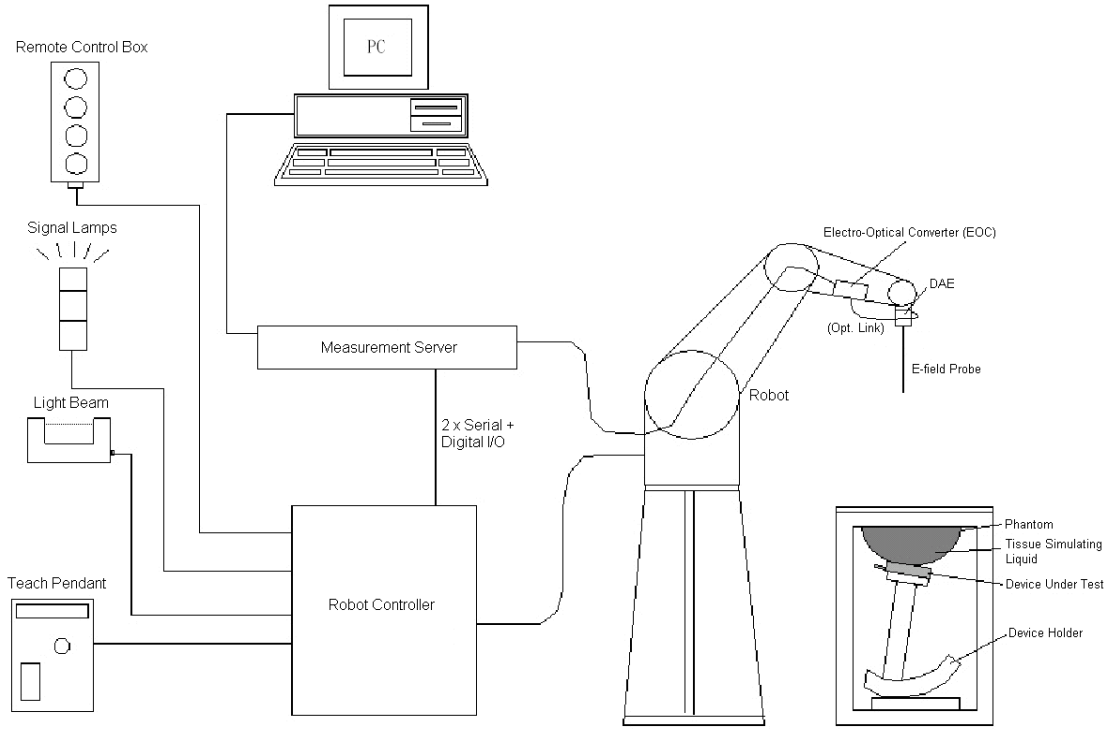

Fig 5.1 SPEAG DASY System Configurations

The DASY system for performance compliance tests is illustrated above graphically. This system consists of the following items:

- A standard high precision 6-axis robot with controller, a teach pendant and software
- A data acquisition electronic (DAE) attached to the robot arm extension
- A dosimetric probe equipped with an optical surface detector system
- The electro-optical converter (EOC) performs the conversion between optical and electrical signals
- A measurement server performs the time critical tasks such as signal filtering, control of the robot operation and fast movement interrupts.
- A probe alignment unit which improves the accuracy of the probe positioning
- A computer operating Windows XP
- DASY software
- Remove control with teach pendant and additional circuitry for robot safety such as warming lamps, etc.
- The SAM twin phantom
- A device holder
- Tissue simulating liquid
- Dipole for evaluating the proper functioning of the system

Some of the components are described in details in the following sub-sections.

5.1 E-Field Probe

The SAR measurement is conducted with the dosimetric probe (manufactured by SPEAG).The probe is specially designed and calibrated for use in liquid with high permittivity. The dosimetric probe has special calibration in liquid at different frequency. This probe has a built in optical surface detection system to prevent from collision with phantom.

5.1.1 E-Field Probe Specification

<ET3DV6 / ET3DV6R Probe >

Construction	Symmetrical design with triangular core Built-in optical fiber for surface detection system. Built-in shielding against static charges. PEEK enclosure material (resistant to organic solvents, e.g., DGBE)
Frequency	10 MHz to 3 GHz; Linearity: ± 0.2 dB
Directivity	± 0.2 dB in HSL (rotation around probe axis) ± 0.4 dB in HSL (rotation normal to probe axis)
Dynamic Range	5 µW/g to 100 mW/g; Linearity: ± 0.2 dB
Dimensions	Overall length: 330 mm (Tip: 16 mm) Tip diameter: 6.8 mm (Body: 12 mm) Distance from probe tip to dipole centers: 2.7 mm

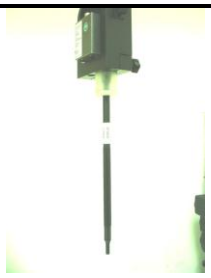

Fig 5.2 Photo of ET3DV6/ET3DV6R

5.1.2 E-Field Probe Calibration

Each probe needs to be calibrated according to a dosimetric assessment procedure. The calibration data can be referred to appendix C of this report.

5.2 Data Acquisition Electronics (DAE)

The data acquisition electronics (DAE) consists of a highly sensitive electrometer-grade preamplifier with auto-zeroing, a channel and gain-switching multiplexer, a fast 16 bit AD-converter and a command decoder and control logic unit. Transmission to the measurement server is accomplished through an optical downlink for data and status information as well as an optical uplink for commands and the clock.
The input impedance of the DAE is 200 MOhm; the inputs are symmetrical and floating. Common mode rejection is above 80 dB.

Fig 5.3 Photo of DAE

5.3 Robot

The SPEAG DASY system uses the high precision robots (DASY4: RX90BL; DASY5: TX90XL) type from Stäubli SA (France). For the 6-axis controller system, the robot controller version (DASY4: CS7MB; DASY5: CS8c) from Stäubli is used. The Stäubli robot series have many features that are important for our application:

- High precision (repeatability ±0.035 mm)
- High reliability (industrial design)
- Jerk-free straight movements
- Low ELF interference (the closed metallic construction shields against motor control fields)

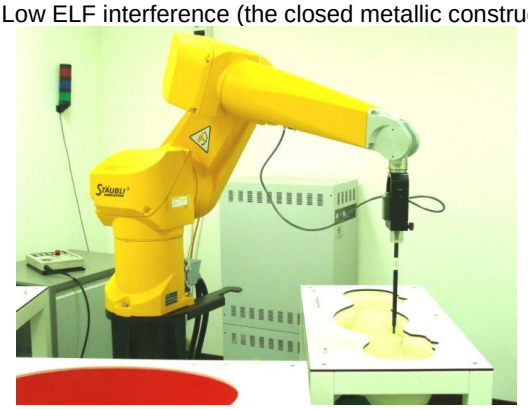

Fig 5.4 Photo of DASY4

Fig 5.5 Photo of DASY5

5.4 Measurement Server

The measurement server is based on a PC/104 CPU board with CPU (DASY4: 166 MHz, Intel Pentium; DASY5: 400 MHz, Intel Celeron), chipdisk (DASY4: 32 MB; DASY5: 128 MB), RAM (DASY4: 64 MB, DASY5: 128 MB). The necessary circuits for communication with the DAE electronic box, as well as the 16 bit AD converter system for optical detection and digital I/O interface are contained on the DASY I/O board, which is directly connected to the PC/104 bus of the CPU board.

The measurement server performs all the real-time data evaluation for field measurements and surface detection, controls robot movements and handles safety operations.

Fig 5.6 Photo of Server for DASY4

Fig 5.7 Photo of Server for DASY5

5.5 Phantom

<SAM Twin Phantom>

Shell Thickness	2 ± 0.2 mm; Center ear point: 6 ± 0.2 mm	 **Fig 5.8 Photo of SAM Phantom**
Filling Volume	Approx. 25 liters	
Dimensions	Length: 1000 mm; Width: 500 mm; Height: adjustable feet	
Measurement Areas	Left Hand, Right Hand, Flat Phantom	

The bottom plate contains three pair of bolts for locking the device holder. The device holder positions are adjusted to the standard measurement positions in the three sections. A white cover is provided to tap the phantom during off-periods to prevent water evaporation and changes in the liquid parameters. On the phantom top, three reference markers are provided to identify the phantom position with respect to the robot.

<ELI4 Phantom>

Shell Thickness	2 ± 0.2 mm (sagging: <1%)	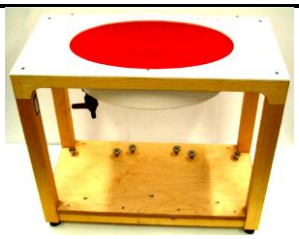 **Fig 5.9 Photo of ELI4 Phantom**
Filling Volume	Approx. 30 liters	
Dimensions	Major ellipse axis: 600 mm Minor axis: 400 mm	

The ELI4 phantom is intended for compliance testing of handheld and body-mounted wireless devices in the frequency range of 30 MHz to 6 GHz. ELI4 is fully compatible with standard and all known tissue simulating liquids.

5.6 Device Holder

<Device Holder for SAM Twin Phantom>

The SAR in the phantom is approximately inversely proportional to the square of the distance between the source and the liquid surface. For a source at 5 mm distance, a positioning uncertainty of ± 0.5 mm would produce a SAR uncertainty of ± 20 %. Accurate device positioning is therefore crucial for accurate and repeatable measurements. The positions in which the devices must be measured are defined by the standards.

The DASY device holder is designed to cope with different positions given in the standard. It has two scales for the device rotation (with respect to the body axis) and the device inclination (with respect to the line between the ear reference points). The rotation center for both scales is the ear reference point (ERP). Thus the device needs no repositioning when changing the angles.

The DASY device holder is constructed of low-loss POM material having the following dielectric parameters: relative permittivity ε = 3 and loss tangent δ = 0.02. The amount of dielectric material has been reduced in the closest vicinity of the device, since measurements have suggested that the influence of the clamp on the test results could thus be lowered.

Fig 5.10 Device Holder

<Laptop Extension Kit>

The extension is lightweight and made of POM, acrylic glass and foam. It fits easily on the upper part of the mounting device in place of the phone positioned. The extension is fully compatible with the SAM Twin and ELI phantoms.

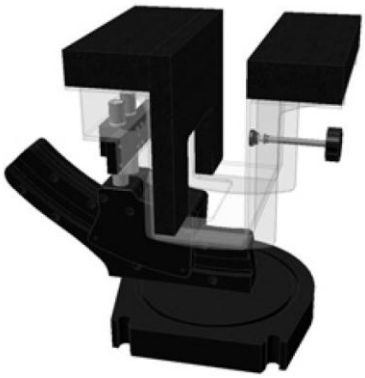

Fig 5.11 Laptop Extension Kit

5.7 Data Storage and Evaluation

5.7.1 Data Storage

The DASY software stores the assessed data from the data acquisition electronics as raw data (in microvolt readings from the probe sensors), together with all the necessary software parameters for the data evaluation (probe calibration data, liquid parameters and device frequency and modulation data) in measurement files. The post-processing software evaluates the desired unit and format for output each time the data is visualized or exported. This allows verification of the complete software setup even after the measurement and allows correction of erroneous parameter settings. For example, if a measurement has been performed with an incorrect crest factor parameter in the device setup, the parameter can be corrected afterwards and the data can be reevaluated.

The measured data can be visualized or exported in different units or formats, depending on the selected probe type (e.g., [V/m], [A/m], [mW/g]). Some of these units are not available in certain situations or give meaningless results, e.g., a SAR-output in a non-lose media, will always be zero. Raw data can also be exported to perform the evaluation with other software packages.

5.7.2 Data Evaluation

The DASY post-processing software (SEMCAD) automatically executes the following procedures to calculate the field units from the microvolt readings at the probe connector. The parameters used in the evaluation are stored in the configuration modules of the software：

Probe parameters：	- Sensitivity	$Norm_i$, a_{i0}, a_{i1}, a_{i2}
	- Conversion factor	$ConvF_i$
	- Diode compression point	dcp_i
Device parameters：	- Frequency	f
	- Crest factor	cf
Media parameters：	- Conductivity	σ
	- Density	ρ

These parameters must be set correctly in the software. They can be found in the component documents or they can be imported into the software from the configuration files issued for the DASY components. In the direct measuring mode of the multi-meter option, the parameters of the actual system setup are used. In the scan visualization and export modes, the parameters stored in the corresponding document files are used.

The first step of the evaluation is a linearization of the filtered input signal to account for the compression characteristics of the detector diode. The compensation depends on the input signal, the diode type and the DC-transmission factor from the diode to the evaluation electronics. If the exciting field is pulsed, the crest factor of the signal must be known to correctly compensate for peak power.

The formula for each channel can be given as：

$$\mathbf{V_i = U_i + U_i^2 \cdot \frac{cf}{dcp_i}}$$

with V_i = compensated signal of channel i, (i = x, y, z)
U_i = input signal of channel i, (i = x, y, z)
cf = crest factor of exciting field (DASY parameter)
dcp_i = diode compression point (DASY parameter)

From the compensated input signals, the primary field data for each channel can be evaluated：

E-field Probes：$\mathbf{E_i = \sqrt{\frac{V_i}{Norm_i \cdot ConvF}}}$

H-field Probes：$\mathbf{H_i = \sqrt{V_i} \cdot \frac{a_{i0}+a_{i1}f+a_{i2}f^2}{f}}$

with V_i = compensated signal of channel i, (i = x, y, z)
$Norm_i$ = sensor sensitivity of channel i, (i = x, y, z), μV/(V/m)^2 for E-field Probes
ConvF = sensitivity enhancement in solution
a_{ij} = sensor sensitivity factors for H-field probes
f = carrier frequency [GHz]
E_i = electric field strength of channel i in V/m
H_i = magnetic field strength of channel i in A/m

The RSS value of the field components gives the total field strength (Hermitian magnitude)：

$$\mathbf{E_{tot} = \sqrt{E_x^2 + E_y^2 + E_z^2}}$$

The primary field data are used to calculate the derived field units.

$$\mathbf{SAR = E_{tot}^2 \cdot \frac{\sigma}{\rho \cdot 1000}}$$

with SAR = local specific absorption rate in mW/g
E_{tot} = total field strength in V/m
σ = conductivity in [mho/m] or [Siemens/m]
ρ = equivalent tissue density in g/cm^3

Note that the density is set to 1, to account for actual head tissue density rather than the density of the tissue simulating liquid.

5.8 Test Equipment List

Manufacturer	Name of Equipment	Type/Model	Serial Number	Calibration	
				Last Cal.	Due Date
SPEAG	835MHz System Validation Kit	D835V2	499	Mar. 22, 2010	Mar. 21, 2013
SPEAG	1900MHz System Validation Kit	D1900V2	5d041	Mar. 23, 2010	Mar. 22, 2013
SPEAG	Data Acquisition Electronics	DAE3	495	Apr. 23, 2012	Apr. 22, 2013
SPEAG	Dosimetric E-Field Probe	ET3DV6	1787	May. 29, 2012	May. 28, 2013
H.M.IRIS	Thermometer	TH-08	TM658	Nov. 13, 2012	Nov. 12, 2013
SPEAG	Device Holder	N/A	N/A	NCR	NCR
SPEAG	ELI4 Phantom	QD 0VA 002 AA	TP-1127	NCR	NCR
SPEAG	ELI4 Phantom	QD 0VA 002 AA	TP-1131	NCR	NCR
Agilent	Network Analyzer	E5071C	MY46101588	May. 11, 2012	May. 10, 2013
Agilent	ESG Vector Series Signal Generator	E4438C	MY49070755	Oct. 02, 2012	Oct. 01, 2013
Anritsu	Radio Communication Analyzer	MT8820C	6201074414	Dec. 11, 2012	Dec. 10, 2014
Agilent	Wireless Communication Test Set	E5515C	MY48360820	Jan. 05, 2012	Jan. 04, 2014
Agilent	Dual Directional Coupler	778D	50422	Note 4	
Woken	Attenuator 1	WK0602-XX	N/A	Note 4	
PE	Attenuator 2	PE7005-10	N/A	Note 4	
PE	Attenuator 3	PE7005- 3	N/A	Note 4	
Agilent	Dielectric Probe Kit	85070D	US01440205	Note 5	
AR	Power Amplifier	5S1G4M2	0328767	Note 6	
R&S	Spectrum Analyzer	FSP	101131	Jul. 23, 2012	Jul. 22, 2013

Table 5.1 Test Equipment List

Note:

1. The calibration certificate of DASY can be referred to appendix C of this report.
2. Referring to KDB 865664 D01v01, the dipole calibration interval can be extended to 3 years with justification. The dipoles are also not physically damaged, or repaired during the interval.
3. The justification data of dipole D835V2, SN: 499, and D1900V2, SN: 5d041 can be found in appendix C. The return loss is < -20dB, within 20% of prior calibration, the impedance is within 5 ohm of prior calibration.
4. The Insertion Loss calibration of Dual Directional Coupler and Attenuator were characterized via the network analyzer and compensated during system check.
5. The dielectric probe kit was calibrated via the network analyzer, with the specified procedure (calibrated in pure water) and calibration kit (standard) short circuit, before the dielectric measurement. The specific procedure and calibration kit are provided by Agilent.
6. In system check we need to monitor the level on the power meter, and adjust the power amplifier level to have 24dBm to the dipole. For system check, the calibration of the power amplifier is deemed not critically required for correct measurement; the power meter is critical and we do have calibration for it
7. Attenuator 1 insertion loss is calibrated by the network Analyzer, which the calibration is valid, before system check.

6. Tissue Simulating Liquids

For the measurement of the field distribution inside the SAM phantom with DASY, the phantom must be filled with around 25 liters of homogeneous body tissue simulating liquid. For body SAR testing, the liquid height from the center of the flat phantom to the liquid top surface is larger than 15 cm, which is shown in Fig. 6.1.

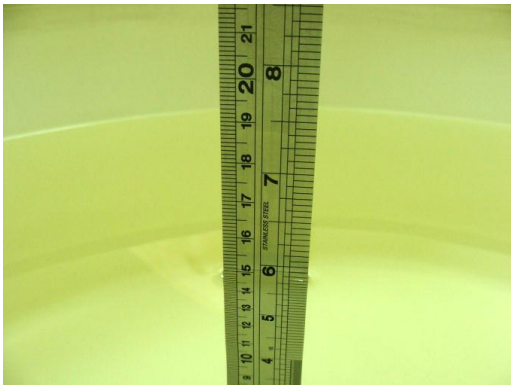

Fig 6.1 Photo of Liquid Height for Body SAR

The following table gives the recipes for tissue simulating liquid.

Frequency (MHz)	Water (%)	Sugar (%)	Cellulose (%)	Salt (%)	Preventol (%)	DGBE (%)	Conductivity (σ)	Permittivity (ε_r)
For Body								
835	50.8	48.2	0	0.9	0.1	0	0.97	55.2
1800, 1900, 2000	70.2	0	0	0.4	0	29.4	1.52	53.3

Table 6.1 Recipes of Tissue Simulating Liquid

The dielectric parameters of the liquids were verified prior to the SAR evaluation using an Agilent 85070D Dielectric Probe Kit and an Agilent Network Analyzer.

The following table shows the measuring results for simulating liquid.

Freq. (MHz)	Liquid Type	Temp. (℃)	Conductivity (σ)	Permittivity (ε_r)	Conductivity Target (σ)	Permittivity Target (ε_r)	Delta (σ) (%)	Delta (ε_r) (%)	Limit (%)	Date
835	Body	21.4	0.963	54.5	0.97	55.2	-0.72	-1.27	±5	2012/12/15
1900	Body	21.5	1.531	54.169	1.52	53.3	0.72	1.63	±5	2012/12/14

Table 6.2 Measuring Results for Simulating Liquid

7. SAR System Validation

Each DASY system is equipped with one or more system validation kits. These units, together with the predefined measurement procedures within the DASY software, enable the user to conduct the system performance check and system validation. System validation kit includes a dipole, tripod holder to fix it underneath the flat phantom and a corresponding distance holder.

7.1 Purpose of System Performance check

The system performance check verifies that the system operates within its specifications. System and operator errors can be detected and corrected. It is recommended that the system performance check be performed prior to any usage of the system in order to guarantee reproducible results. The system performance check uses normal SAR measurements in a simplified setup with a well characterized source. This setup was selected to give a high sensitivity to all parameters that might fail or vary over time. The system check does not intend to replace the calibration of the components, but indicates situations where the system uncertainty is exceeded due to drift or failure.

7.2 System Setup

In the simplified setup for system evaluation, the EUT is replaced by a calibrated dipole and the power source is replaced by a continuous wave that comes from a signal generator. The calibrated dipole must be placed beneath the flat phantom section of the SAM twin phantom with the correct distance holder. The distance holder should touch the phantom surface with a light pressure at the reference marking and be oriented parallel to the long side of the phantom. The equipment setup is shown below:

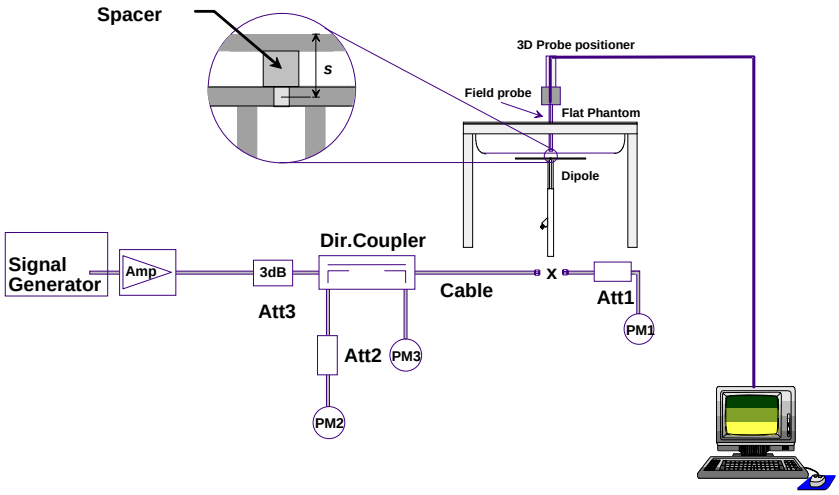

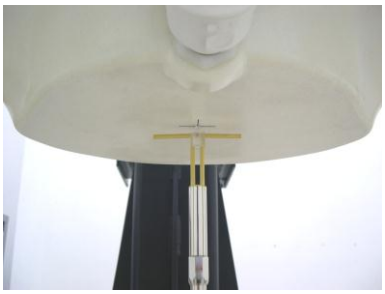

Fig 7.1 System Setup for System Evaluation **Fig 7.2 Photo of Dipole Setup**

1. Signal Generator
2. Amplifier
3. Directional Coupler
4. Power Meter
5. Calibrated Dipole

7.3 SAR System Verification Results

Comparing to the original SAR value provided by SPEAG, the Verification data should be within its specification of 10 %. Table 7.1 shows the target SAR and measured SAR after normalized to 1W input power. The table below indicates the system performance check can meet the variation criterion and the plots can be referred to Appendix A of this report.

Measurement Date	Frequency (MHz)	Liquid Type	Input power fed to dipole (mW)	Targeted SAR_{1g} (W/kg)	Measured SAR_{1g} (W/kg)	Normalized SAR_{1g} (W/kg)	Deviation (%)
2012/12/15	835	Body	250	9.82	2.5	10	1.83
2012/12/14	1900	Body	250	40	9.91	39.64	-0.90

Table 7.1 Target and Measurement SAR after Normalized

8. EUT Testing Position

This EUT was tested in three different positions. They are bottom of tablet PC, Edge3, and Edge4. In these positions, the surface of EUT is touching with phantom 0 cm and additional 1 cm separation for bottom-face. Please refer to Appendix E for the test setup photos.

9. Measurement Procedures

The measurement procedures are as follows:

<Conducted power measurement>

(a) For WWAN power measurement, use base station simulator to configure EUT WWAN transmission in conducted connection with RF cable, at maximum power in each supported wireless interface and frequency band.
(b) Read the WWAN RF power level from the base station simulator.
(c) For WLAN/BT power measurement, use engineering software to configure EUT WLAN/BT continuously transmission, at maximum RF power in each supported wireless interface and frequency band
(d) Connect EUT RF port through RF cable to the power meter, and measure WLAN/BT output power

<SAR measurement>

(a) Use base station simulator to configure EUT WWAN transmission in radiated connection, and engineering software to configure EUT WLAN/BT continuously transmission, at maximum RF power, in the highest power channel.
(b) Place the EUT in the positions as Appendix E demonstrates.
(c) Set scan area, grid size and other setting on the DASY software.
(d) Measure SAR results for the highest power channel on each testing position.
(e) Find out the largest SAR result on these testing positions of each band
(f) Measure SAR results for other channels in worst SAR testing position if the reported SAR of highest power channel is larger than 0.8 W/kg

According to the test standard, the recommended procedure for assessing the peak spatial-average SAR value consists of the following steps:

(a) Power reference measurement
(b) Area scan
(c) Zoom scan
(d) Power drift measurement

9.1 Spatial Peak SAR Evaluation

The procedure for spatial peak SAR evaluation has been implemented according to the test standard. It can be conducted for 1g and 10g, as well as for user-specific masses. The DASY software includes all numerical procedures necessary to evaluate the spatial peak SAR value.

The base for the evaluation is a "cube" measurement. The measured volume must include the 1g and 10g cubes with the highest averaged SAR values. For that purpose, the center of the measured volume is aligned to the interpolated peak SAR value of a previously performed area scan.

The entire evaluation of the spatial peak values is performed within the post-processing engine (SEMCAD). The system always gives the maximum values for the 1g and 10g cubes. The algorithm to find the cube with highest averaged SAR is divided into the following stages:

(a) Extraction of the measured data (grid and values) from the Zoom Scan
(b) Calculation of the SAR value at every measurement point based on all stored data (A/D values and measurement parameters)
(c) Generation of a high-resolution mesh within the measured volume
(d) Interpolation of all measured values form the measurement grid to the high-resolution grid
(e) Extrapolation of the entire 3-D field distribution to the phantom surface over the distance from sensor to surface
(f) Calculation of the averaged SAR within masses of 1g and 10g

9.2 Area & Zoom Scan Procedures

First Area Scan is used to locate the approximate location(s) of the local peak SAR value(s). The measurement grid within an Area Scan is defined by the grid extent, grid step size and grid offset. Next, in order to determine the EM field distribution in a three-dimensional spatial extension, Zoom Scan is required. The Zoom Scan is performed around the highest E-field value to determine the averaged SAR-distribution over 10 g.
Area scan and zoom scan resolution setting follows KDB 865664 D01v01 quoted below.

For any secondary peaks found in the area scan which are within 2 dB of the maximum peak and are not within this zoom scan, the zoom scan should be repeated.

			≤ 3 GHz	> 3 GHz
Maximum distance from closest measurement point (geometric center of probe sensors) to phantom surface			5 ± 1 mm	½·δ·ln(2) ± 0.5 mm
Maximum probe angle from probe axis to phantom surface normal at the measurement location			30° ± 1°	20° ± 1°
Maximum area scan spatial resolution: Δx_{Area}, Δy_{Area}			≤ 2 GHz: ≤ 15 mm 2 – 3 GHz: ≤ 12 mm	3 – 4 GHz: ≤ 12 mm 4 – 6 GHz: ≤ 10 mm
			When the x or y dimension of the test device, in the measurement plane orientation, is smaller than the above, the measurement resolution must be ≤ the corresponding x or y dimension of the test device with at least one measurement point on the test device.	
Maximum zoom scan spatial resolution: Δx_{Zoom}, Δy_{Zoom}			≤ 2 GHz: ≤ 8 mm 2 – 3 GHz: ≤ 5 mm*	3 – 4 GHz: ≤ 5 mm* 4 – 6 GHz: ≤ 4 mm*
Maximum zoom scan spatial resolution, normal to phantom surface	uniform grid: $\Delta z_{Zoom}(n)$		≤ 5 mm	3 – 4 GHz: ≤ 4 mm 4 – 5 GHz: ≤ 3 mm 5 – 6 GHz: ≤ 2 mm
	graded grid	$\Delta z_{Zoom}(1)$: between 1st two points closest to phantom surface	≤ 4 mm	3 – 4 GHz: ≤ 3 mm 4 – 5 GHz: ≤ 2.5 mm 5 – 6 GHz: ≤ 2 mm
		$\Delta z_{Zoom}(n>1)$: between subsequent points	$\leq 1.5 \cdot \Delta z_{Zoom}(n-1)$	
Minimum zoom scan volume	x, y, z		≥ 30 mm	3 – 4 GHz: ≥ 28 mm 4 – 5 GHz: ≥ 25 mm 5 – 6 GHz: ≥ 22 mm

Note: δ is the penetration depth of a plane-wave at normal incidence to the tissue medium; see draft standard IEEE P1528-2011 for details.

* When zoom scan is required and the *reported* SAR from the area scan based *1-g SAR estimation* procedures of KDB 447498 is ≤ 1.4 W/kg, ≤ 8 mm, ≤ 7 mm and ≤ 5 mm zoom scan resolution may be applied, respectively, for 2 GHz to 3 GHz, 3 GHz to 4 GHz and 4 GHz to 6 GHz.

9.3 Volume Scan Procedures

The volume scan is used for assess overlapping SAR distributions for antennas transmitting in different frequency bands. It is equivalent to an oversized zoom scan used in standalone measurements. The measurement volume will be used to enclose all the simultaneous transmitting antennas. For antennas transmitting simultaneously in different frequency bands, the volume scan is measured separately in each frequency band. In order to sum correctly to compute the 1g aggregate SAR, the EUT remain in the same test position for all measurements and all volume scan use the same spatial resolution and grid spacing. When all volume scan were completed, the software, SEMCAD postprocessor can combine and subsequently superpose these measurement data to calculating the multiband SAR.

9.4 SAR Averaged Methods

In DASY, the interpolation and extrapolation are both based on the modified Quadratic Shepard's method. The interpolation scheme combines a least-square fitted function method and a weighted average method which are the two basic types of computational interpolation and approximation.

Extrapolation routines are used to obtain SAR values between the lowest measurement points and the inner phantom surface. The extrapolation distance is determined by the surface detection distance and the probe sensor offset. The uncertainty increases with the extrapolation distance. To keep the uncertainty within 1% for the 1 g and 10 g cubes, the extrapolation distance should not be larger than 5 mm.

9.5 Power Drift Monitoring

All SAR testing is under the EUT install full charged battery and transmit maximum output power. In DASY measurement software, the power reference measurement and power drift measurement procedures are used for monitoring the power drift of EUT during SAR test. Both these procedures measure the field at a specified reference position before and after the SAR testing. The software will calculate the field difference in dB. If the power drifts more than 5%, the SAR will be retested.

10. Exposure Position Consideration

<Tablet PC>

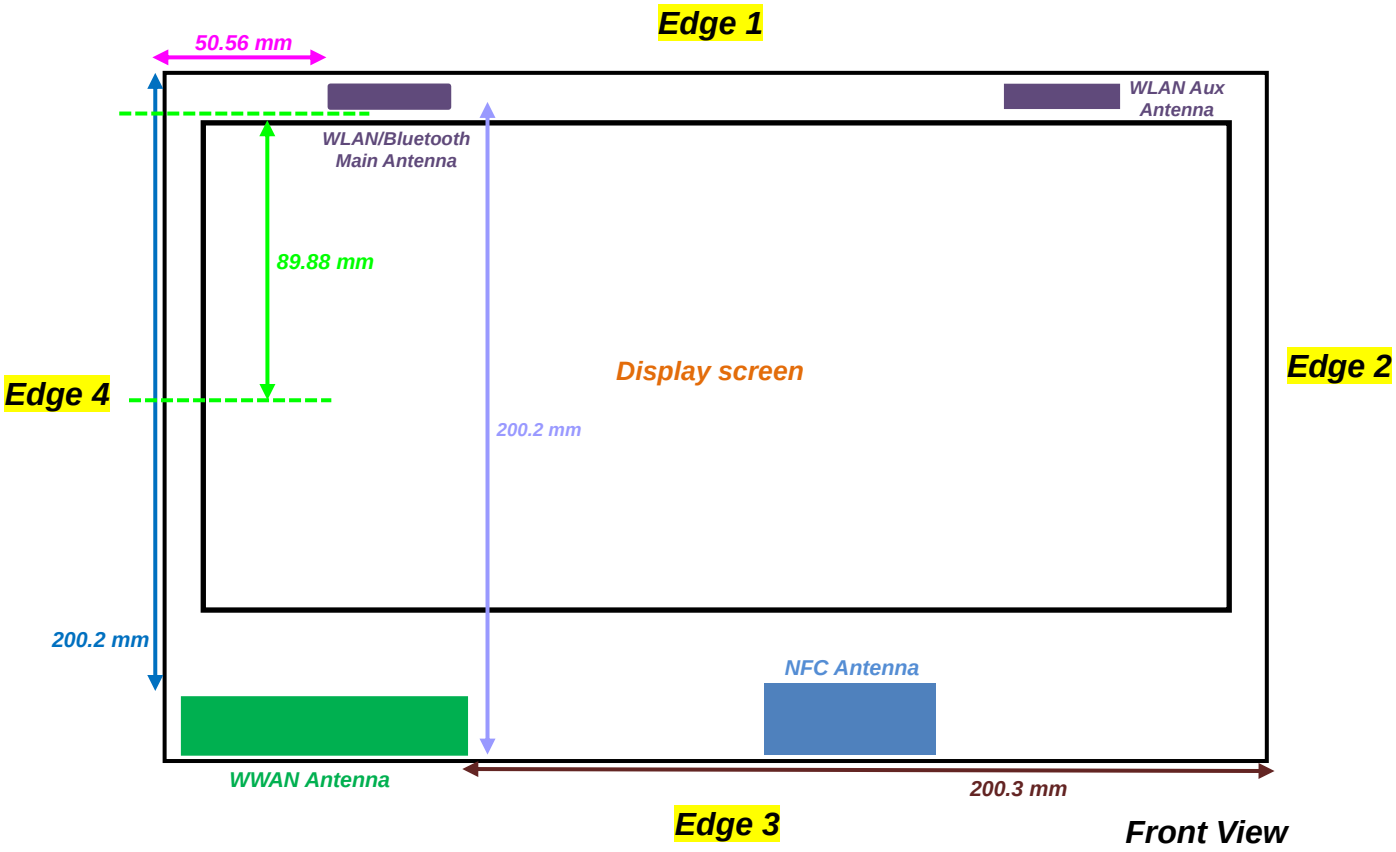

Note:

1. The display screen can be fold onto the keypad and the device is in tablet mode
2. BT/WLAN main and WLAN aux antennas to back (bottom face) separation is 19mm.

<Laptop>

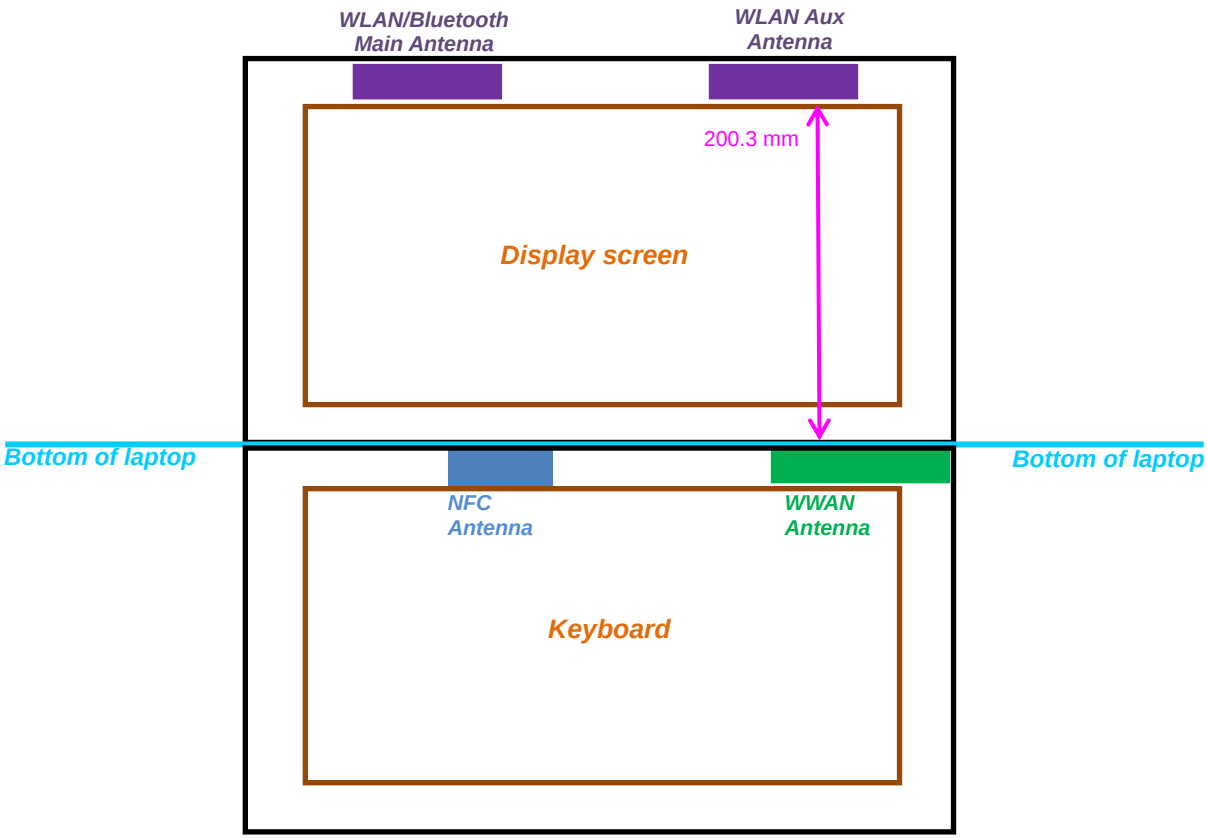

Antennas	Wireless Interface
WWAN Antenna (Tx/Rx)	GSM850 GSM1900 WCDMA Band 2 WCDMA Band 5

<Full Power>

		WWAN Antenna			
Wireless Interface		GPRS850 Class 10	GPRS1900 Class 10	WCDMA Band 5	WCDMA Band 2
Tune-up Maximum power (dBm)		27	24	24	24
Tune-up Maximum rated power (mW)		501.19	251.19	251.19	251.19
Bottom Face	Test Separation Distance (mm)	5			
	SAR exclusion threshold (mW)	16	11	16	11
	SAR testing required?	**YES**	**YES**	**YES**	**YES**
Edge 1	Test Separation Distance (mm)	200.2			
	SAR exclusion threshold (mW)	1012	1611	1010	1611
	SAR testing required?	**NO**	**NO**	**NO**	**NO**
Edge 2	Test Separation Distance (mm)	200.3			
	SAR exclusion threshold (mW)	1013	1612	1011	1612
	SAR testing required?	**NO**	**NO**	**NO**	**NO**
Edge 3	Test Separation Distance (mm)	5			
	SAR exclusion threshold (mW)	16	11	16	11
	SAR testing required?	**YES**	**YES**	**YES**	**YES**
Edge 4	Test Separation Distance (mm)	5			
	SAR exclusion threshold (mW)	16	11	16	11
	SAR testing required?	**YES**	**YES**	**YES**	**YES**

Note:

1. Maximum power is the source-based time-average power and represents the maximum RF output power among production units
2. Per KDB 447498 D01v05, for larger devices, the *test separation distance* is determined by the closest separation between the antenna and the user.
3. Per KDB 447498 D01v05, standalone SAR test exclusion threshold is applied; If the distance of the antenna to the user is < 5mm, 5mm is used to determine SAR exclusion threshold.
4. Per KDB 447498 D01v05, the 1-g and 10-g SAR test exclusion thresholds for 100 MHz to 6 GHz at *test separation distances* ≤ 50 mm are determined by:

   [(*max. power of channel, including tune-up tolerance, mW*)/(*min. test separation distance, mm*)] ·[$\sqrt{f(GHz)}$] ≤ 3.0 for 1-g SAR and ≤ 7.5 for 10-g extremity SAR
   - f(GHz) is the RF channel transmit frequency in GHz
   - Power and distance are rounded to the nearest mW and mm before calculation
   - The result is rounded to one decimal place for comparison
5. Per KDB 447498 D01v05, at 100 MHz to 6 GHz and for *test separation distances* > 50 mm, the SAR test exclusion threshold is determined according to the following
   a) [Threshold at 50 mm in step 1) + (test separation distance - 50 mm)·(f(MHz)/150)] mW, at 100 MHz to 1500 MHz
   b) [Threshold at 50 mm in step 1) + (test separation distance - 50 mm)·10] mW at > 1500 MHz and ≤ 6 GHz
6. For the bottom-face that proximity sensor power reduction is applied for SAR compliance, additional SAR testing at "sensor trigger distance – 1mm" with EUT transmitting full power in normal mode was performed.

11. Conducted RF Output Power (Unit: dBm)

<GSM Conducted Power>

Note:

1. Per KDB 447498 D01v05, the maximum output power channel is used for SAR testing and for further SAR test reduction

GSM850 Burst Average Power (dBm)									
Channel	**128**	**189**	**251**	**128**	**189**	**251**	**128**	**189**	**251**
Frequency (MHz)	**824.2**	**836.4**	**848.8**	**824.2**	**836.4**	**848.8**	**824.2**	**836.4**	**848.8**
Mode	**Without Power Back-off**			**With Power Back-off**			**Pwr. Reduction (dB)**		
GPRS (GMSK, 1 Tx slot) – CS1	32.89	32.81	32.70	28.34	28.33	28.17	4.55	4.48	4.53
GPRS (GMSK, 2 Tx slots) – CS1	32.82	32.75	32.66	28.32	28.31	28.15	4.50	4.44	4.51
EDGE (GMSK, 1 Tx slot) – MCS1	32.85	32.80	32.68	28.32	28.31	28.15	4.53	4.49	4.53
EDGE (GMSK, 2 Tx slots) – MCS1	32.80	32.74	32.65	28.30	28.28	28.12	4.50	4.46	4.53
EDGE (8PSK, 1 Tx slot) – MCS5	26.97	26.98	26.91	26.97	26.98	26.91	0	0	0
EDGE (8PSK, 2 Tx slots) – MCS5	26.93	26.93	26.98	26.93	26.93	26.98	0	0	0
GSM850 Frame-Average Power (dBm)									
Channel	**128**	**189**	**251**	**128**	**189**	**251**	**128**	**189**	**251**
Frequency (MHz)	**824.2**	**836.4**	**848.8**	**824.2**	**836.4**	**848.8**	**824.2**	**836.4**	**848.8**
Mode	**Without Power Back-off**			**With Power Back-off**			**Pwr. Reduction (dB)**		
GPRS (GMSK, 1 Tx slot) – CS1	23.89	23.81	23.70	19.34	19.33	19.17	4.55	4.48	4.53
GPRS (GMSK, 2 Tx slots) – CS1	26.82	26.75	26.66	22.32	22.31	22.15	4.50	4.44	4.51
EDGE (GMSK, 1 Tx slot) – MCS1	23.85	23.80	23.68	19.32	19.31	19.15	4.53	4.49	4.53
EDGE (GMSK, 2 Tx slots) – MCS1	26.80	26.74	26.65	22.30	22.28	22.12	4.50	4.46	4.53
EDGE (8PSK, 1 Tx slot) – MCS5	17.97	17.98	17.91	17.97	17.98	17.91	0	0	0
EDGE (8PSK, 2 Tx slots) – MCS5	20.93	20.93	20.98	20.93	20.93	20.98	0	0	0

Remark: The frame-averaged power is linearly scaled the maximum burst averaged power over 8 time slots.
The calculated method is shown as below:
Frame-averaged power = Maximum burst averaged power (1 Tx Slot) - 9 dB
Frame-averaged power = Maximum burst averaged power (2 Tx Slots) - 6 dB

Note:

1. Following KDB 941225 D03, for Body SAR testing, the EUT operating without power back-off was set in GPRS (2 Tx slots) and the EUT operating with power back-off was set in GPRS (2 Tx slots) due to its highest frame-average power.

GSM1900 Burst Average Power (dBm)									
Channel	**512**	**661**	**810**	**512**	**661**	**810**	**512**	**661**	**810**
Frequency (MHz)	**1850.2**	**1880**	**1909.8**	**1850.2**	**1880**	**1909.8**	**1850.2**	**1880**	**1909.8**
Mode	**Without Power Back-off**			**With Power Back-off**			**Pwr. Reduction (dB)**		
GPRS (GMSK, 1 Tx slot) – CS1	29.78	29.57	29.36	24.82	24.73	24.58	4.96	4.84	4.78
GPRS (GMSK, 2 Tx slots) – CS1	29.76	29.54	29.34	24.81	24.72	24.57	4.95	4.82	4.77
EDGE (GMSK, 1 Tx slot) – MCS1	29.76	29.56	29.34	24.80	24.70	24.55	4.96	4.86	4.79
EDGE (GMSK, 2 Tx slots) – MCS1	29.75	29.54	29.32	24.78	24.69	24.53	4.97	4.85	4.79
EDGE (8PSK, 1 Tx slot) – MCS5	26.19	26.41	26.58	24.32	24.57	24.66	1.87	1.84	1.92
EDGE (8PSK, 2 Tx slots) – MCS5	26.56	26.40	26.56	24.50	24.53	24.61	2.06	1.87	1.95
GSM1900 Frame-Averaged Power (dBm)									
Channel	**512**	**661**	**810**	**512**	**661**	**810**	**512**	**661**	**810**
Frequency (MHz)	**1850.2**	**1880**	**1909.8**	**1850.2**	**1880**	**1909.8**	**1850.2**	**1880**	**1909.8**
Mode	**Without Power Back-off**			**With Power Back-off**			**Pwr. Reduction (dB)**		
GPRS (GMSK, 1 Tx slot) – CS1	20.78	20.57	20.36	15.82	15.73	15.58	4.96	4.84	4.78
GPRS (GMSK, 2 Tx slots) – CS1	23.76	23.54	23.34	18.81	18.72	18.57	4.95	4.82	4.77
EDGE (GMSK, 1 Tx slot) – MCS1	20.76	20.56	20.34	15.80	15.70	15.55	4.96	4.86	4.79
EDGE (GMSK, 2 Tx slots) – MCS1	23.75	23.54	23.32	18.78	18.69	18.53	4.97	4.85	4.79
EDGE (8PSK, 1 Tx slot) – MCS5	17.19	17.41	17.58	15.32	15.57	15.66	1.87	1.84	1.92
EDGE (8PSK, 2 Tx slots) – MCS5	20.56	20.40	20.56	18.50	18.53	18.61	2.06	1.87	1.95

Remark: The frame-averaged power is linearly scaled the maximum burst averaged power over 8 time slots.
The calculated method is shown as below:
Frame-averaged power = Maximum burst averaged power (1 Tx Slot) - 9 dB
Frame-averaged power = Maximum burst averaged power (2 Tx Slots) - 6 dB

Note:

1. Following KDB 941225 D03, for Body SAR testing, the EUT operating without power back-off was set in GPRS (2 Tx slots) and the EUT operating with power back-off was set in GPRS (2 Tx slots) due to its highest frame-average power.

<WCDMA Conducted Power>

The following tests were conducted according to the test requirements outlines in 3GPP TS 34.121 specification. A summary of these settings are illustrated below:

HSDPA Setup Configuration:

a. The EUT was connected to Base Station referred to the Setup Configuration.
b. The RF path losses were compensated into the measurements.
c. A call was established between EUT and Base Station with following setting:
   i. Set Gain Factors (β_c and β_d) and parameters were set according to each
   ii. Specific sub-test in the following table, C10.1.4, quoted from the TS 34.121
   iii. Set RMC 12.2Kbps + HSDPA mode.
   iv. Set Cell Power = -86 dBm
   v. Set HS-DSCH Configuration Type to FRC (H-set 1, QPSK)
   vi. Select HSDPA Uplink Parameters
   vii. Set Delta ACK, Delta NACK and Delta CQI = 8
   viii. Set Ack-Nack Repetition Factor to 3
   ix. Set CQI Feedback Cycle (k) to 4 ms
   x. Set CQI Repetition Factor to 2
   xi. Power Ctrl Mode = All Up bits
d. The transmitted maximum output power was recorded.

Table C.10.1.4: β values for transmitter characteristics tests with HS-DPCCH

Sub-test	β_c	β_d	β_d *(SF)*	β_c/β_d	β_{HS} *(Note1, Note 2)*	CM (dB) *(Note 3)*	MPR (dB) *(Note 3)*
1	2/15	15/15	64	2/15	4/15	0.0	0.0
2	12/15 *(Note 4)*	15/15 *(Note 4)*	64	12/15 *(Note 4)*	24/15	1.0	0.0
3	15/15	8/15	64	15/8	30/15	1.5	0.5
4	15/15	4/15	64	15/4	30/15	1.5	0.5

Note 1: Δ_{ACK}, Δ_{NACK} and Δ_{CQI} = 30/15 with β_{hs} = 30/15 * β_c .

Note 2: For the HS-DPCCH power mask requirement test in clause 5.2C, 5.7A, and the Error Vector Magnitude (EVM) with HS-DPCCH test in clause 5.13.1A, and HSDPA EVM with phase discontinuity in clause 5.13.1AA, Δ_{ACK} and Δ_{NACK} = 30/15 with β_{hs} = 30/15 * β_c , and Δ_{CQI} = 24/15 with β_{hs} = 24/15 * β_c .

Note 3: CM = 1 for β_c/β_d =12/15, β_{hs}/β_c=24/15. For all other combinations of DPDCH, DPCCH and HS-DPCCH the MPR is based on the relative CM difference. This is applicable for only UEs that support HSDPA in release 6 and later releases.

Note 4: For subtest 2 the β_c/β_d ratio of 12/15 for the TFC during the measurement period (TF1, TF0) is achieved by setting the signalled gain factors for the reference TFC (TF1, TF1) to β_c = 11/15 and β_d = 15/15.

Setup Configuration

HSUPA Setup Configuration:

a. The EUT was connected to Base Station referred to the Setup Configuration.
b. The RF path losses were compensated into the measurements.
c. A call was established between EUT and Base Station with following setting * :
   i. Call Configs = 5.2B, 5.9B, 5.10B, and 5.13.2B with QPSK
   ii. Set the Gain Factors (β_c and β_d) and parameters (AG Index) were set according to each specific sub-test in the following table, C11.1.3, quoted from the TS 34.121
   iii. Set Cell Power = -86 dBm
   iv. Set Channel Type = 12.2k + HSPA
   v. Set UE Target Power
   vi. Power Ctrl Mode= Alternating bits
   vii. Set and observe the E-TFCI
   viii. Confirm that E-TFCI is equal to the target E-TFCI of 75 for sub-test 1, and other subtest's E-TFCI
d. The transmitted maximum output power was recorded.

Table C.11.1.3: β values for transmitter characteristics tests with HS-DPCCH and E-DCH

Sub-test	β_c	β_d	β_d (SF)	β_c/β_d	β_{HS} (Note1)	β_{ec}	β_{ed} (Note 5) (Note 6)	β_{ed} (SF)	β_{ed} (Codes)	CM (dB) (Note 2)	MPR (dB) (Note 2)	AG Index (Note 6)	E-TFCI
1	11/15 (Note 3)	15/15 (Note 3)	64	11/15 (Note 3)	22/15	209/225	1309/225	4	1	1.0	0.0	20	75
2	6/15	15/15	64	6/15	12/15	12/15	94/75	4	1	3.0	2.0	12	67
3	15/15	9/15	64	15/9	30/15	30/15	$\beta_{ed}1$: 47/15 $\beta_{ed}2$: 47/15	4 4	2	2.0	1.0	15	92
4	2/15	15/15	64	2/15	4/15	2/15	56/75	4	1	3.0	2.0	17	71
5	15/15 (Note 4)	15/15 (Note 4)	64	15/15 (Note 4)	30/15	24/15	134/15	4	1	1.0	0.0	21	81

Note 1: Δ_{ACK}, Δ_{NACK} and Δ_{CQI} = 30/15 with β_{hs} = 30/15 * β_c .
Note 2: CM = 1 for β_c/β_d =12/15, β_{hs}/β_c=24/15. For all other combinations of DPDCH, DPCCH, HS- DPCCH, E-DPDCH and E-DPCCH the MPR is based on the relative CM difference.
Note 3: For subtest 1 the β_c/β_d ratio of 11/15 for the TFC during the measurement period (TF1, TF0) is achieved by setting the signalled gain factors for the reference TFC (TF1, TF1) to β_c = 10/15 and β_d = 15/15.
Note 4: For subtest 5 the β_c/β_d ratio of 15/15 for the TFC during the measurement period (TF1, TF0) is achieved by setting the signalled gain factors for the reference TFC (TF1, TF1) to β_c = 14/15 and β_d = 15/15.
Note 5: In case of testing by UE using E-DPDCH Physical Layer category 1, Sub-test 3 is omitted according to TS25.306 Table 5.1g.
Note 6: β_{ed} can not be set directly, it is set by Absolute Grant Value.

Setup Configuration

<WCDMA Conducted Power>

Note:

1. Applying the subtest setup in Table C.11.1.3 of 3GPP TS 34.121-1 V9.1.0 to Rel. 6 HSPA.
2. Per KDB 941225 D01, RMC 12.2kbps setting is used to evaluate SAR. If HSDPA/HSUPA output power is < 0.25dB higher than RMC, HSDPA/HSUPA SAR evaluation can be excluded.
3. By design, HSDPA/HSUPA RF power will not be larger than RMC 12.2kbps, detailed information is included in Tune-up Procure exhibit.
4. It is expected by the manufacturer that MPR for some HSDPA/HSUPA subtests may differ from the specification of 3GPP, according to the chipset implementation in this model. The implementation and expected deviation are detailed in tune-up procedure exhibit.

WCDMA Band V Average power (dBm)										
Channel		4132	4182	4233	4132	4182	4233	4132	4182	4233
Frequency (MHz)		826.4	836.4	846.6	826.4	836.4	846.6	826.4	836.4	846.6
Mode		Without Power Back-off			With Power Back-off			Pwr. Reduction (dB)		
3GPP Rel 99	RMC 12.2Kbps	23.38	23.50	23.57	21.24	21.41	21.53	2.14	2.09	2.04
3GPP Rel 6	HSDPA Subtest-1	23.15	23.28	23.34	21.09	21.24	21.30	2.06	2.04	2.04
3GPP Rel 6	HSDPA Subtest-2	23.07	23.19	23.27	21.05	21.21	21.30	2.02	1.98	1.97
3GPP Rel 6	HSDPA Subtest-3	22.60	22.76	22.81	21.07	21.20	21.29	1.53	1.56	1.52
3GPP Rel 6	HSDPA Subtest-4	22.58	22.73	22.80	21.09	21.24	21.29	1.49	1.49	1.51
3GPP Rel 6	HSUPA Subtest-1	23.04	23.23	23.31	20.89	21.12	21.09	2.15	2.11	2.22
3GPP Rel 6	HSUPA Subtest-2	20.61	21.21	21.29	18.44	18.92	18.61	2.17	2.29	2.68
3GPP Rel 6	HSUPA Subtest-3	22.02	22.14	22.28	19.31	19.76	19.46	2.71	2.38	2.82
3GPP Rel 6	HSUPA Subtest-4	21.01	21.16	21.28	18.48	18.91	18.77	2.53	2.25	2.51
3GPP Rel 6	HSUPA Subtest-5	23.02	23.19	23.27	20.93	21.15	21.11	2.09	2.04	2.16

WCDMA Band V MPR Results (dB)								
Channel		4132	4182	4233	4132	4182	4233	3GPP MPR
Subtests		Without Power Back-off			With Power Back-off			(dB)
3GPP Rel 6	HSDPA Subtest-1	0.00	0.00	0.00	0.00	0.00	0.00	**0**
3GPP Rel 6	HSDPA Subtest-2	0.08	0.09	0.07	0.04	0.03	0.00	**0**
3GPP Rel 6	HSDPA Subtest-3	0.55	0.52	0.53	0.02	0.04	0.01	**≤ 0.5**
3GPP Rel 6	HSDPA Subtest-4	0.57	0.55	0.54	0.00	0.00	0.01	**≤ 0.5**
3GPP Rel 6	HSUPA Subtest-1	-0.02	-0.04	-0.04	0.04	0.03	0.02	**0**
3GPP Rel 6	HSUPA Subtest-2	2.41	1.98	1.98	2.49	2.23	2.50	**≤ 2**
3GPP Rel 6	HSUPA Subtest-3	1.00	1.05	0.99	1.62	1.39	1.65	**≤ 1**
3GPP Rel 6	HSUPA Subtest-4	2.01	2.03	1.99	2.45	2.24	2.34	**≤ 2**
3GPP Rel 6	HSUPA Subtest-5	0.00	0.00	0.00	0.00	0.00	0.00	**0**

WCDMA Band II Average power (dBm)										
Channel		9262	9400	9538	9262	9400	9538	9262	9400	9538
Frequency (MHz)		1852.4	1880.0	1907.6	1852.4	1880.0	1907.6	1852.4	1880.0	1907.6
Mode		Without Power Back-off			With Power Back-off			Pwr. Reduction (dB)		
3GPP Rel 99	RMC 12.2Kbps	23.54	23.56	23.45	19.57	19.60	19.47	3.97	3.96	3.98
3GPP Rel 6	HSDPA Subtest-1	22.16	22.23	22.21	19.04	19.09	19.06	3.12	3.14	3.15
3GPP Rel 6	HSDPA Subtest-2	22.14	22.23	22.24	19.03	19.09	19.07	3.11	3.14	3.17
3GPP Rel 6	HSDPA Subtest-3	21.60	21.74	21.71	19.00	19.06	19.08	2.60	2.68	2.63
3GPP Rel 6	HSDPA Subtest-4	21.59	21.71	21.65	19.01	19.10	19.08	2.58	2.61	2.57
3GPP Rel 6	HSUPA Subtest-1	22.13	22.25	22.31	18.44	18.24	18.33	3.69	4.01	3.98
3GPP Rel 6	HSUPA Subtest-2	20.32	20.11	20.28	16.81	16.73	16.76	3.51	3.38	3.52
3GPP Rel 6	HSUPA Subtest-3	21.13	21.25	21.35	17.57	17.24	17.37	3.56	4.01	3.98
3GPP Rel 6	HSUPA Subtest-4	20.16	20.22	20.32	16.83	16.62	16.72	3.33	3.60	3.60
3GPP Rel 6	HSUPA Subtest-5	22.20	22.21	22.24	18.34	18.12	18.24	3.86	4.09	4.00

WCDMA Band II MPR Results (dB)								
Channel		9262	9400	9538	9262	9400	9538	3GPP MPR
Subtests		Without Power Back-off			With Power Back-off			(dB)
3GPP Rel 6	HSDPA Subtest-1	0.00	0.00	0.00	0.00	0.00	0.00	**0**
3GPP Rel 6	HSDPA Subtest-2	0.02	0.00	-0.03	0.01	0.00	-0.01	**0**
3GPP Rel 6	HSDPA Subtest-3	0.56	0.49	0.50	0.04	0.03	-0.02	**≤ 0.5**
3GPP Rel 6	HSDPA Subtest-4	0.57	0.52	0.56	0.03	-0.01	-0.02	**≤ 0.5**
3GPP Rel 6	HSUPA Subtest-1	0.07	-0.04	-0.07	-0.10	-0.12	-0.09	**0**
3GPP Rel 6	HSUPA Subtest-2	1.88	2.10	1.96	1.53	1.39	1.48	**≤ 2**
3GPP Rel 6	HSUPA Subtest-3	1.07	0.96	0.89	0.77	0.88	0.87	**≤ 1**
3GPP Rel 6	HSUPA Subtest-4	2.04	1.99	1.92	1.51	1.50	1.52	**≤ 2**
3GPP Rel 6	HSUPA Subtest-5	0.00	0.00	0.00	0.00	0.00	0.00	**0**

12. SAR Test Results

<Note>

1. Per KDB 447498 D01v05, the reported SAR is the measured SAR value adjusted for maximum tune-up tolerance.
   Scaling Factor = tune-up limit power (mW) / EUT RF power (mW), where tune-up limit is the maximum rated power among all production units.
   Reported SAR(W/kg)= Measured SAR(W/kg) Scaling Factor*
2. Per KDB 447498 D01v05, for each exposure position, if the highest output channel reported SAR other channels SAR testing are not necessary.
3. For the exposure positions that proximity sensor power reduction is applied for SAR compliance, additional SAR testing with EUT transmitting full power in normal mode was performed; in this report, it is 1cm for bottom face

12.1 Test Records for Body SAR Test

<GSM SAR>

Plot No.	Band	Mode	Test Position	Gap (cm)	Ch.	Freq. (MHz)	Power Back-off	Burst Average Power (dBm)	Tune-up Limit (dBm)	Tune-up Scaling Factor	Power Drift (dB)	Measure SAR_{1g} (W/kg)	Reported 1g SAR (W/kg)
Tablet mode													
29	GSM850	GPRS (2 Tx slots)	Bottom Face	0cm	128	824.2	ON	28.32	29	1.169	0.13	1.04	1.216
30	GSM850	GPRS (2 Tx slots)	Bottom Face	0cm	189	836.4	ON	28.31	29	1.172	-0.04	1.14	1.336
31	GSM850	GPRS (2 Tx slots)	Bottom Face	0cm	251	848.8	ON	28.15	29	1.216	-0.01	1.08	1.313
32	**GSM850**	**GPRS (2 Tx slots)**	**Edge 3**	**0cm**	**128**	**824.2**	**ON**	**28.32**	**29**	**1.169**	**0.05**	**1.23**	**1.438**
33	GSM850	GPRS (2 Tx slots)	Edge 3	0cm	189	836.4	ON	28.31	29	1.172	0.03	1.11	1.301
34	GSM850	GPRS (2 Tx slots)	Edge 3	0cm	251	848.8	ON	28.15	29	1.216	0.07	0.926	1.126
35	GSM850	GPRS (2 Tx slots)	Edge 4	0cm	128	824.2	ON	28.32	29	1.169	-0.065	0.665	0.778
39	GSM850	GPRS (2 Tx slots)	Bottom Face	1cm	128	824.2	OFF	32.82	33	1.042	-0.1	1.06	1.105
40	GSM850	GPRS (2 Tx slots)	Bottom Face	1cm	189	836.4	OFF	32.75	33	1.059	-0.1	1.09	1.155
41	GSM850	GPRS (2 Tx slots)	Bottom Face	1cm	251	848.8	OFF	32.66	33	1.081	-0.13	1	1.081
Laptop mode													
36	GSM850	GPRS (2 Tx slots)	Bottom	0cm	128	824.2	ON	28.32	29	1.169	0.03	1.06	1.240
37	GSM850	GPRS (2 Tx slots)	Bottom	0cm	189	836.4	ON	28.31	29	1.172	0.125	1.18	1.383
38	GSM850	GPRS (2 Tx slots)	Bottom	0cm	251	848.8	ON	28.15	29	1.216	0.15	1.18	1.435

Plot No.	Band	Mode	Test Position	Gap (cm)	Ch.	Freq. (MHz)	Power Back-off	Burst Average Power (dBm)	Tune-up Limit (dBm)	Tune-up Scaling Factor	Power Drift (dB)	Measure SAR_{1g} (W/kg)	Reported 1g SAR (W/kg)
Tablet mode													
1	GSM1900	GPRS(2 TX Slots)	Bottom Face	0cm	512	1850.2	ON	24.81	25	1.045	0.04	0.599	0.626
2	GSM1900	GPRS(2 TX Slots)	Edge 3	0cm	512	1850.2	ON	24.81	25	1.045	-0.03	0.744	0.777
8	GSM1900	GPRS(2 TX Slots)	Edge 3	0cm	661	1880	ON	24.72	25	1.067	-0.02	0.756	0.806
9	GSM1900	GPRS(2 TX Slots)	Edge 3	0cm	810	1909.8	ON	24.57	25	1.104	-0.04	0.787	0.869
3	GSM1900	GPRS(2 TX Slots)	Edge 4	0cm	512	1850.2	ON	24.81	25	1.045	0	1.04	1.087
6	GSM1900	GPRS(2 TX Slots)	Edge 4	0cm	661	1880	ON	24.72	25	1.067	-0.08	1.08	1.152
7	**GSM1900**	**GPRS(2 TX Slots)**	**Edge 4**	**0cm**	**810**	**1909.8**	**ON**	**24.57**	**25**	**1.104**	**-0.1**	**1.28**	**1.413**
5	GSM1900	GPRS(2 TX Slots)	Bottom Face	1cm	512	1850.2	OFF	29.76	30	1.057	0.154	0.428	0.452
Laptop mode													
4	GSM1900	GPRS(2 TX Slots)	Bottom	0cm	512	1850.2	ON	24.81	25	1.045	-0.02	0.65	0.679

<WCDMA SAR>

Plot No.	Band	Mode	Test Position	Gap (cm)	Ch.	Freq. (MHz)	Power Back-off	Burst Average Power (dBm)	Tune-up Limit (dBm)	Tune-up Scaling Factor	Power Drift (dB)	Measure SAR_{1g} (W/kg)	Reported 1g SAR (W/kg)
Tablet mode													
42	WCDMA V	RMC12.2Kbps	Bottom Face	0cm	4233	846.6	ON	21.53	22	1.114	0.01	0.949	1.057
43	WCDMA V	RMC12.2Kbps	Bottom Face	0cm	4132	826.4	ON	21.24	22	1.191	-0.02	0.892	1.063
44	WCDMA V	RMC12.2Kbps	Bottom Face	0cm	4182	836.4	ON	21.41	22	1.146	-0.01	0.913	1.046
58	WCDMA V	RMC12.2Kbps	Bottom Face	1cm	4233	846.6	OFF	23.57	24	1.104	-0.02	0.434	0.479
45	WCDMA V	RMC12.2Kbps	Edge 3	0cm	4233	846.6	ON	21.53	22	1.114	-0.03	1.13	1.259
46	WCDMA V	RMC12.2Kbps	Edge 3	0cm	4132	826.4	ON	21.24	22	1.191	-0.03	0.97	1.156
47	WCDMA V	RMC12.2Kbps	Edge 3	0cm	4182	836.4	ON	21.41	22	1.146	0.01	1.05	1.203
48	**WCDMA V**	**HSDPA subtest 1**	**Edge 3**	**0cm**	**4233**	**846.6**	**ON**	**21.30**	**22**	**1.175**	**-0.02**	**1.16**	**1.363**
49	WCDMA V	HSDPA subtest 1	Edge 3	0cm	4132	826.4	ON	21.09	22	1.233	-0.02	0.988	1.218
50	WCDMA V	HSDPA subtest 1	Edge 3	0cm	4182	836.4	ON	21.24	22	1.191	-0.03	1.07	1.275
51	WCDMA V	HSUPA subtest 5	Edge 3	0cm	4233	846.6	ON	21.11	22	1.227	0	1.1	1.350
52	WCDMA V	HSUPA subtest 5	Edge 3	0cm	4132	826.4	ON	20.93	22	1.279	-0.01	0.931	1.191
53	WCDMA V	HSUPA subtest 5	Edge 3	0cm	4182	836.4	ON	21.15	22	1.216	0.01	1	1.216
54	WCDMA V	RMC12.2Kbps	Edge 4	0cm	4233	846.6	ON	21.53	22	1.114	-0.02	0.385	0.429
Laptop mode													
55	WCDMA V	RMC12.2Kbps	Bottom	0cm	4233	846.6	ON	21.53	22	1.114	-0.01	0.954	1.063
56	WCDMA V	RMC12.2Kbps	Bottom	0cm	4132	826.4	ON	21.24	22	1.191	-0.02	0.841	1.002
57	WCDMA V	RMC12.2Kbps	Bottom	0cm	4182	836.4	ON	21.41	22	1.146	-0.01	0.885	1.014

Plot No.	Band	Mode	Test Position	Gap (cm)	Ch.	Freq. (MHz)	Power Back-off	Burst Average Power (dBm)	Tune-up Limit (dBm)	Tune-up Scaling Factor	Power Drift (dB)	Measure SAR_{1g} (W/kg)	Reported 1g SAR (W/kg)
Tablet mode													
10	WCDMA II	RMC12.2Kbps	Bottom Face	0cm	9400	1880	ON	19.60	20	1.096	0.043	0.826	0.906
11	WCDMA II	RMC12.2Kbps	Bottom Face	0cm	9262	1852.4	ON	19.57	20	1.104	-0.15	0.777	0.858
12	WCDMA II	RMC12.2Kbps	Bottom Face	0cm	9538	1907.6	ON	19.47	20	1.130	-0.122	0.821	0.928
28	WCDMA II	RMC12.2Kbps	Bottom Face	1cm	9400	1880	OFF	23.56	24	1.107	-0.07	0.441	0.488
13	WCDMA II	RMC12.2Kbps	Edge 3	0cm	9400	1880	ON	19.60	20	1.096	0.001	0.757	0.830
14	WCDMA II	RMC12.2Kbps	Edge 3	0cm	9262	1852.4	ON	19.57	20	1.104	0.19	0.739	0.816
15	WCDMA II	RMC12.2Kbps	Edge 3	0cm	9538	1907.6	ON	19.47	20	1.130	-0.12	0.726	0.820
16	WCDMA II	RMC12.2Kbps	Edge 4	0cm	9400	1880	ON	19.60	20	1.096	0.01	1.05	1.151
17	WCDMA II	RMC12.2Kbps	Edge 4	0cm	9262	1852.4	ON	19.57	20	1.104	0.04	1.01	1.115
18	WCDMA II	RMC12.2Kbps	Edge 4	0cm	9538	1907.6	ON	19.47	20	1.130	0.02	1.07	1.209
19	WCDMA II	HSDPA subtest 1	Edge 4	0cm	9538	1907.6	ON	19.06	20	1.242	-0.13	1.11	1.378
20	**WCDMA II**	**HSDPA subtest 1**	**Edge 4**	**0cm**	**9262**	**1852.4**	**ON**	**19.04**	**20**	**1.247**	**0.029**	**1.11**	**1.385**
21	WCDMA II	HSDPA subtest 1	Edge 4	0cm	9400	1880	ON	19.09	20	1.233	0.11	0.958	1.181
22	WCDMA II	HSUPA subtest 5	Edge 4	0cm	9538	1907.6	ON	18.24	20	1.500	-0.025	0.864	1.296
23	WCDMA II	HSUPA subtest 5	Edge 4	0cm	9262	1852.4	ON	18.34	20	1.466	-0.04	0.833	1.221
24	WCDMA II	HSUPA subtest 5	Edge 4	0cm	9400	1880	ON	18.12	20	1.542	0.001	0.874	1.347
Laptop mode													
25	WCDMA II	RMC12.2Kbps	Bottom	0cm	9400	1880	ON	19.60	20	1.096	0.063	0.821	0.900
26	WCDMA II	RMC12.2Kbps	Bottom	0cm	9262	1852.4	ON	19.57	20	1.104	0.04	0.852	0.941
27	WCDMA II	RMC12.2Kbps	Bottom	0cm	9538	1907.6	ON	19.47	20	1.130	0.04	0.798	0.902

Note:

1. For Body SAR, per KDB 941225 D01, RMC 12.2kbps setting is used to evaluate SAR. If HSDPA/HSUPA output power is < 0.25dB higher than RMC, or *Reported* SAR with RMC 12.2kbps setting is ≤ 1.2W/kg, HSDPA/HSUPA SAR evaluation can be excluded.
2. If *Reported* SAR with RMC 12.2kbps setting is > 1.2W/kg, HSDPA subtest-1 and HSUPA subtest-5 SAR is additionally tested at that exposure position.

12.2 Repeated SAR Measurement

Plot No.	Band	Mode	Test Position	Gap (cm)	Ch.	Freq. (MHz)	Power Back-off	Burst Average Power (dBm)	Tune-up Limit (dBm)	Tune-up Scaling Factor	Power Drift (dB)	Measure SAR_{1g} (W/kg)	Reported 1g SAR (W/kg)
32	GSM850	GPRS (2 Tx slots)	Edge 3	0cm	128	824.2	ON	28.32	29	1.169	0.05	1.23	1.438
59	GSM850	GPRS (2 Tx slots)	Edge 3	0cm	128	824.2	ON	28.32	29	1.169	0.124	1.19	1.392
7	GSM1900	GPRS(2 TX Slots)	Edge 4	0cm	810	1909.8	ON	24.57	25	1.104	-0.1	1.28	1.413
60	GSM1900	GPRS(2 TX Slots)	Edge 4	0cm	810	1909.8	ON	24.57	25	1.104	-0.12	1.23	1.358
48	WCDMA V	HSDPA subtest 1	Edge 3	0cm	4233	846.6	ON	21.30	22	1.175	-0.02	1.16	1.363
61	WCDMA V	HSDPA subtest 1	Edge 3	0cm	4233	846.6	ON	21.30	22	1.175	0.03	1.1	1.292
20	WCDMA II	HSDPA subtest 1	Edge 4	0cm	9262	1852.4	ON	19.04	20	1.247	0.029	1.11	1.385
62	WCDMA II	HSDPA subtest 1	Edge 4	0cm	9262	1852.4	ON	19.04	20	1.247	-0.128	1.09	1.360

Note:

1. Per KDB 865664 D01v01, for each frequency band, repeated SAR measurement is required only when the measured SAR is ≥ 0.8 W/kg
2. Per KDB 865664 D01v01, if the deviation among the repeated measurement is ≤ 20% and the measured SAR < 1.45 W/kg, only one repeated measurement is required.
3. The deviation is the difference in percentage between original and repeated *measured SAR*.
4. All measurement SAR result is scaled-up to account for tune-up tolerance and is compliant.

12.3 Highest SAR Plot

Plot No.	Band	Mode	Test Position	Gap (cm)	Ch.	Freq. (MHz)	Power Back-off	Burst Average Power (dBm)	Tune-up Limit (dBm)	Tune-up Scaling Factor	Power Drift (dB)	Measure SAR_{1g} (W/kg)	Reported 1g SAR (W/kg)
32	GSM850	GPRS (2 Tx slots)	Edge 3	0cm	128	824.2	ON	28.32	29	1.169	0.05	1.23	1.438
7	GSM1900	GPRS(2 TX Slots)	Edge 4	0cm	810	1909.8	ON	24.57	25	1.104	-0.1	1.28	1.413
48	WCDMA V	HSDPA subtest-1	Edge 3	0cm	4233	846.6	ON	21.30	22	1.175	-0.02	1.16	1.363
20	WCDMA II	HSDPA subtest-1	Edge 4	0cm	9262	1852.4	ON	19.04	20	1.247	0.029	1.11	1.385

Test Laboratory: Sporton International Inc. SAR/HAC Testing Lab Date: 2012/12/15

#32_GSM850_GPRS (2 Tx slots)_Edge 3_0cm_Ch128

DUT: 2N2103-02

Communication System: GSM850; Frequency: 824.2 MHz;Duty Cycle: 1:4
Medium: MSL_850_121215 Medium parameters used : f = 824.2 MHz; σ = 0.953 mho/m; ε_r = 54.624; ρ = 1000 kg/m^3
Ambient Temperature：22.4 ℃; Liquid Temperature：21.4 ℃

DASY5 Configuration:
- Probe: ET3DV6 - SN1787; ConvF(6.08, 6.08, 6.08); Calibrated: 2012/5/29;
- Sensor-Surface: 4mm (Mechanical Surface Detection)
- Electronics: DAE3 Sn495; Calibrated: 2012/4/23
- Phantom: ELI v4.0; Type: QDOVA001BB; Serial: TP:1127
- Measurement SW: DASY52, Version 52.8 (3); SEMCAD X Version 14.6.5 (6469)

Configuration/Ch128/Area Scan (41x211x1): Measurement grid: dx=15mm, dy=15mm
Maximum value of SAR (interpolated) = 1.46 mW/g

Configuration/Ch128/Zoom Scan (5x5x7)/Cube 0: Measurement grid: dx=8mm, dy=8mm, dz=5mm
Reference Value = 4.272 V/m; Power Drift = 0.05 dB
Peak SAR (extrapolated) = 2.288 mW/g
SAR(1 g) = 1.23 mW/g; SAR(10 g) = 0.647 mW/g
Maximum value of SAR (measured) = 1.42 mW/g

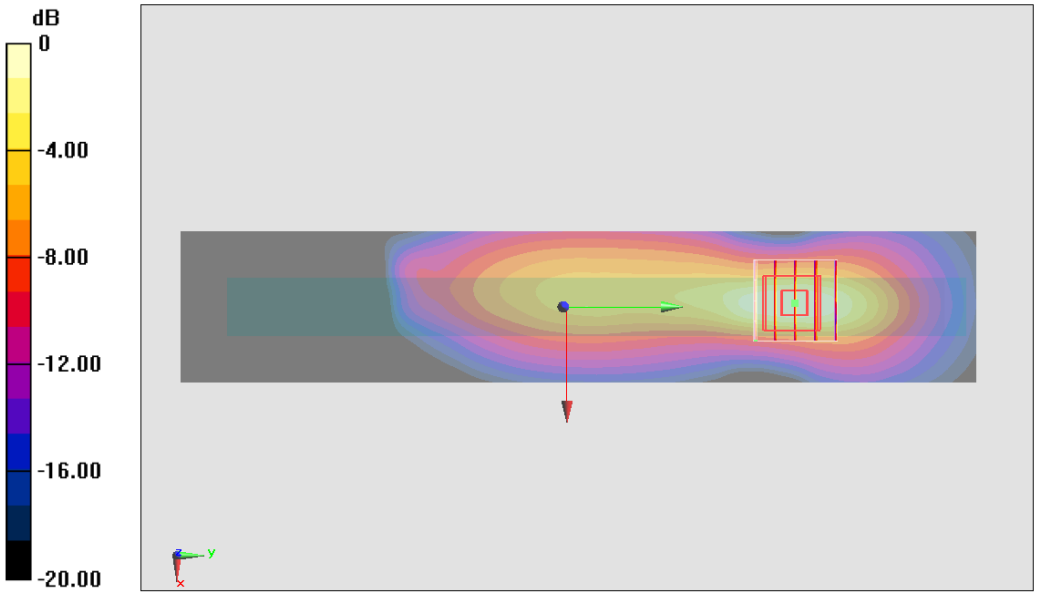

0 dB = 1.42 mW/g = 3.05 dB mW/g

Test Laboratory: Sporton International Inc. SAR/HAC Testing Lab Date: 2012/12/14

#07_GSM1900_GPRS(2 TX Slots)_Edge 4_0cm_Ch810

DUT: 2N2103-02

Communication System: PCS; Frequency: 1909.8 MHz;Duty Cycle: 1:4
Medium: MSL_1900_121214 Medium parameters used: f = 1910 MHz; σ = 1.543 mho/m; ε_r = 54.108; ρ = 1000 kg/m^3
Ambient Temperature：22.5 ℃; Liquid Temperature：21.5 ℃

DASY5 Configuration:
- Probe: ET3DV6 - SN1787; ConvF(4.58, 4.58, 4.58); Calibrated: 2012/5/29;
- Sensor-Surface: 4mm (Mechanical Surface Detection)
- Electronics: DAE3 Sn495; Calibrated: 2012/4/23
- Phantom: ELI v5.0 Left; Type: QDOVA002AA; Serial: TP:1131
- Measurement SW: DASY52, Version 52.8 (3); SEMCAD X Version 14.6.5 (6469)

Configuration/Ch810/Area Scan (41x181x1): Measurement grid: dx=15mm, dy=15mm
Maximum value of SAR (interpolated) = 1.33 mW/g

Configuration/Ch810/Zoom Scan (5x5x7)/Cube 0: Measurement grid: dx=8mm, dy=8mm, dz=5mm
Reference Value = 31.849 V/m; Power Drift = -0.10 dB
Peak SAR (extrapolated) = 2.586 mW/g
SAR(1 g) = 1.28 mW/g; SAR(10 g) = 0.654 mW/g
Maximum value of SAR (measured) = 1.27 mW/g

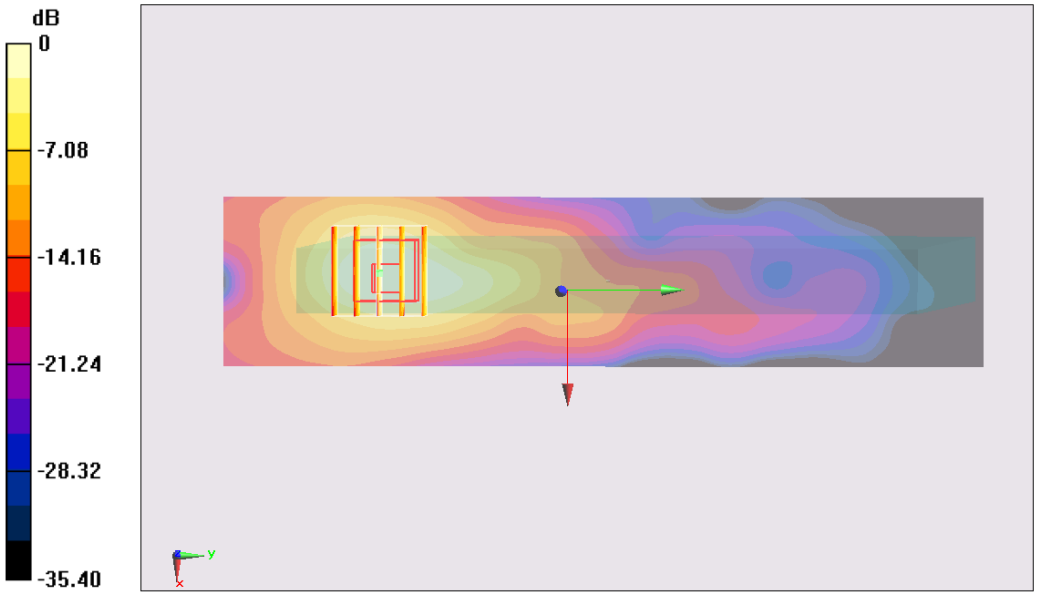

0 dB = 1.27 mW/g = 2.08 dB mW/g

Test Laboratory: Sporton International Inc. SAR/HAC Testing Lab Date: 2012/12/15

#48_WCDMA V_HSDPA_Edge 3_0cm_Ch4233

DUT: 2N2103-02

Communication System: WCDMA; Frequency: 846.6 MHz;Duty Cycle: 1:1
Medium: MSL_850_121215 Medium parameters used: f = 847 MHz; σ = 0.975 mho/m; ε_r = 54.38; ρ = 1000 kg/m^3
Ambient Temperature：22.4 ℃; Liquid Temperature：21.4 ℃

DASY5 Configuration:
- Probe: ET3DV6 - SN1787; ConvF(6.08, 6.08, 6.08); Calibrated: 2012/5/29;
- Sensor-Surface: 4mm (Mechanical Surface Detection)
- Electronics: DAE3 Sn495; Calibrated: 2012/4/23
- Phantom: ELI v4.0; Type: QDOVA001BB; Serial: TP:1127
- Measurement SW: DASY52, Version 52.8 (3); SEMCAD X Version 14.6.5 (6469)

Configuration/Ch4233/Area Scan (41x211x1): Measurement grid: dx=15mm, dy=15mm
Maximum value of SAR (interpolated) = 1.33 mW/g

Configuration/Ch4233/Zoom Scan (5x5x7)/Cube 0: Measurement grid: dx=8mm, dy=8mm, dz=5mm
Reference Value = 38.605 V/m; Power Drift = -0.02 dB
Peak SAR (extrapolated) = 2.146 mW/g
SAR(1 g) = 1.16 mW/g; SAR(10 g) = 0.604 mW/g
Maximum value of SAR (measured) = 1.32 mW/g

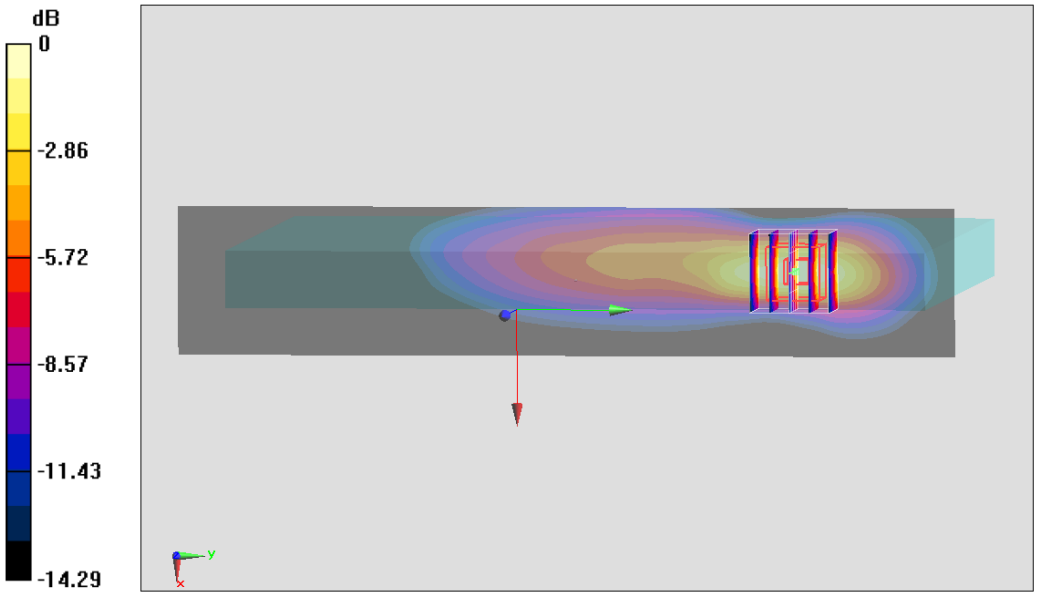

0 dB = 1.32 mW/g = 2.41 dB mW/g

Test Laboratory: Sporton International Inc. SAR/HAC Testing Lab Date: 2012/12/14

#20_WCDMA II_HSDPA_Edge 4_0cm_Ch9262

DUT: 2N2103-02

Communication System: WCDMA; Frequency: 1852.4 MHz;Duty Cycle: 1:1
Medium: MSL_1900_121214 Medium parameters used : f = 1852.4 MHz; σ = 1.477 mho/m; ε_r = 54.295; ρ = 1000 kg/m^3
Ambient Temperature：22.5 ℃; Liquid Temperature：21.5 ℃

DASY5 Configuration:
- Probe: ET3DV6 - SN1787; ConvF(4.58, 4.58, 4.58); Calibrated: 2012/5/29;
- Sensor-Surface: 4mm (Mechanical Surface Detection)
- Electronics: DAE3 Sn495; Calibrated: 2012/4/23
- Phantom: ELI v5.0 Left; Type: QDOVA002AA; Serial: TP:1131
- Measurement SW: DASY52, Version 52.8 (3); SEMCAD X Version 14.6.5 (6469)

Configuration/Ch9262/Area Scan (41x181x1): Measurement grid: dx=15mm, dy=15mm
Maximum value of SAR (interpolated) = 1.31 mW/g

Configuration/Ch9262/Zoom Scan (5x5x7)/Cube 0: Measurement grid: dx=8mm, dy=8mm, dz=5mm
Reference Value = 0.185 V/m; Power Drift = 0.029 dB
Peak SAR (extrapolated) = 1.747 mW/g
SAR(1 g) = 1.11 mW/g; SAR(10 g) = 0.613 mW/g
Maximum value of SAR (measured) = 1.26 mW/g

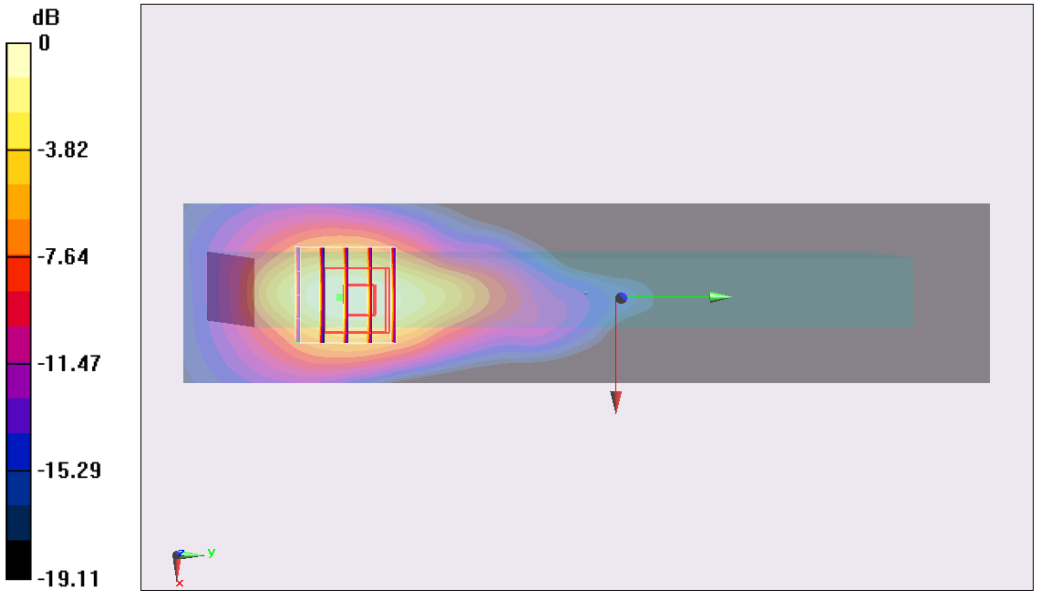

0 dB = 1.26 mW/g = 2.01 dB mW/g

12.4 Simultaneous Transmission SAR Analysis and Measurements

No.	Applicable Simultaneous Transmission Combination
1.	WWAN(data)+WLAN(router)
2.	WWAN(data)+BT

Note:

1. WLAN module FCC ID:PD96235ANH is also integrated into this host, and C2PC filing was granted on 2012/12/18. WLAN and Bluetooth power and SAR test data is referred to SGS FCC SAR Report, Report No: ES2012B0011, available on FCC website.
2. By design, WLAN 5GHz frequency band does not support mobile hotspot operation
3. The Scaled SAR summation is calculated based on the same configuration and test position.
4. WLAN/BT main antenna and WLAN aux antenna are both more than 20cm to the edge3 exposure position, and MPE is estimated for simultaneous transmission consideration at edge3.
5. For simultaneous transmission analysis, Bluetooth SAR is estimated per KDB 447498 D01v05 based on the formula below.
   i) (*max. power of channel, including tune-up tolerance, mW*)/(*min. test separation distance, mm*)]·[$\sqrt{f(GHz)}/x$] W/kg for *test separation distances* ≤ 50 mm; where x = 7.5 for 1-g SAR, and x = 18.75 for 10-g SAR.
   ii) 0.4 W/kg for 1-g SAR and 1.0 W/kg for 10-g SAR, when the *test separation distances* is > 50 mm.

Bluetooth maximum RF power is 6dBm, and the estimated SAR is listed below

Exposure Position	Bottom Face	Bottom Face	Edge 4
Test separation	0 mm	10 mm	0 mm
Antenna to user distance	19 mm	29 mm	50.56 mm
Estimated SAR (W/kg)	0.044W/kg	0.029 W/kg	0.017 W/kg

In this report, 50mm separation is applied to conservatively estimate SAR value for separation distance > 50mm

WLAN 2.4GHz maximum rated RF power is 16.5dBm, and the estimated SAR for edge4 is also listed below

Exposure Position	Edge 4
Test separation	0 mm
Antenna to user distance	50.56 mm
Estimated SAR (W/kg)	0.193 W/kg

In this report, 50mm separation is applied to conservatively estimate SAR value for WLAN Main antenna , WLAN Aux antenna and MIMO mode

6. The distance between WLAN antenna and edge3 is 20.02 cm,
7. MPE limit for general population in 1.5GHz-100GHz is 1 mW/cm^2
8. Per KDB 447498 D01v05, The [Σ of (the highest measured or estimated SAR for each standalone antenna configuration, adjusted for maximum tune-up tolerance) / 1.6 W/kg] + [Σ of MPE ratios] is ≤ 1.0, simultaneous transmission of mixed mobile and portable exposure conditions is compliant, for WWAN and WLAN in Edge3 exposure position
9. Per KDB 447498 D01v05, simultaneous transmission SAR is compliant if,
   i) Scalar SAR summation < 1.6W/kg.
   ii) SPLSR = $(SAR_1 + SAR_2)^{1.5}$ / (*min. separation distance, mm*), and the peak separation distance is determined from the square root of $[(x_1-x_2)^2 + (y_1-y_2)^2 + (z_1-z_2)^2]$, where (x_1, y_1, z_1) and (x_2, y_2, z_2) are the coordinates of the extrapolated peak SAR locations in the zoom scan
   If SPLSR ≤ 0.04, simultaneously transmission SAR measurement is not necessary
   iii) Simultaneously transmission SAR measurement, and the reported multi-band SAR < 1.6W/kg

<Tablet PC mode>
WWAN + WLAN Main Antenna (DTS)

	WWAN			WLAN-DTS	Sum		
Position	WWAN Band	Plot No	Max. Reported SAR (W/kg)	Max. Reported SAR (W/kg)	WWAN + WLAN (W/kg)	SPLSR ≤ 0.04	Case No
Bottom Face At 0cm	GSM850	30	1.336	0.00955	**1.35**		
	GSM1900	1	0.626	0.00955	**0.64**		
	WCDMA V	43	1.063	0.00955	**1.07**		
	WCDMA II	12	0.928	0.00955	**0.94**		
Edge3 At 0cm	GSM850	32	1.438		**1.44**		
	GSM1900	9	0.869		**0.87**		
	WCDMA V	48	1.363		**1.36**		
	WCDMA II	13	0.83		**0.83**		
Edge4 At 0cm	GSM850	35	0.778	0.193	**0.97**		
	GSM1900	7	1.413	0.193	**1.61**	**0.012**	**#1**
	WCDMA V	54	0.429	0.193	**0.62**		
	WCDMA II	20	1.385	0.193	**1.58**		
Bottom Face At 1cm	GSM850	40	1.155	0.00955	**1.16**		
	GSM1900	5	0.452	0.00955	**0.46**		
	WCDMA V	58	0.479	0.00955	**0.49**		
	WCDMA II	28	0.488	0.00955	**0.50**		

	WWAN				WLAN-DTS				Summation (1)
Position	WWAN Band	Plot No	Max. Reported SAR (W/kg)	Reported SAR / 1.6	WLAN maximum rated power (dBm)	WLAN antenna gain (dBi)	MPE estimation (mW/cm^2)	MPE estimation / MPE limit	
Edge 3 (0 cm gap)	GSM850	32	1.438	0.899	16.5	3.2	0.02	0.02	**0.92**
	GSM1900	9	0.869	0.543	16.5	3.2	0.02	0.02	**0.56**
	WCDMA V	48	1.363	0.852	16.5	3.2	0.02	0.02	**0.87**
	WCDMA II	13	0.83	0.519	16.5	3.2	0.02	0.02	**0.54**

Note:

1. Per KDB 447498 D01v05, The [Σ of (the highest measured or estimated SAR for each standalone antenna configuration, adjusted for maximum tune-up tolerance) / 1.6 W/kg] + [Σ of MPE ratios] is ≤ 1.0, simultaneous transmission of mixed mobile and portable exposure conditions is compliant.

WWAN + WLAN Aux Antenna (DTS)

Position	WWAN Band	Plot No	Max. Reported SAR (W/kg)	WLAN-DTS Max. Reported SAR (W/kg)	Sum WWAN + WLAN (W/kg)	SPLSR ≤ 0.04	Case No
Bottom Face At 0cm	GSM850	30	1.336	0.015	**1.35**		
	GSM1900	1	0.626	0.015	**0.64**		
	WCDMA V	43	1.063	0.015	**1.08**		
	WCDMA II	12	0.928	0.015	**0.94**		
Edge3 At 0cm	GSM850	32	1.438		**1.44**		
	GSM1900	9	0.869		**0.87**		
	WCDMA V	48	1.363		**1.36**		
	WCDMA II	13	0.83		**0.83**		
Edge4 At 0cm	GSM850	35	0.778	0.193	**0.97**		
	GSM1900	7	1.413	0.193	**1.61**	**0.012**	**#1**
	WCDMA V	54	0.429	0.193	**0.62**		
	WCDMA II	20	1.385	0.193	**1.58**		
Bottom Face At 1cm	GSM850	40	1.155	0.015	**1.17**		
	GSM1900	5	0.452	0.015	**0.47**		
	WCDMA V	58	0.479	0.015	**0.49**		
	WCDMA II	28	0.488	0.015	**0.50**		

Position	WWAN Band	Plot No	Max. Reported SAR (W/kg)	Reported SAR / 1.6	WLAN-DTS WLAN maximum rated power (dBm)	WLAN antenna gain (dBi)	MPE estimation (mW/cm^2)	MPE estimation / MPE limit	Summation (1)
Edge 3 (0 cm gap)	GSM850	32	1.438	0.899	16.5	3.2	0.02	0.02	**0.92**
	GSM1900	9	0.869	0.543	16.5	3.2	0.02	0.02	**0.56**
	WCDMA V	48	1.363	0.852	16.5	3.2	0.02	0.02	**0.87**
	WCDMA II	13	0.83	0.519	16.5	3.2	0.02	0.02	**0.54**

Note:

1. Per KDB 447498 D01v05, The [Σ of (the highest measured or estimated SAR for each standalone antenna configuration, adjusted for maximum tune-up tolerance) / 1.6 W/kg] + [Σ of MPE ratios] is ≤ 1.0, simultaneous transmission of mixed mobile and portable exposure conditions is compliant.

WWAN + WLAN MIMO Antenna (DTS)

Position	WWAN Band	Plot No	Max. Reported SAR (W/kg)	WLAN-DTS Max. Reported SAR (W/kg)	Sum WWAN + WLAN (W/kg)	SPLSR ≤ 0.04	Case No
Bottom Face At 0cm	GSM850	30	1.336	0.0254	**1.36**		
	GSM1900	1	0.626	0.0254	**0.65**		
	WCDMA V	43	1.063	0.0254	**1.09**		
	WCDMA II	12	0.928	0.0254	**0.95**		
Edge3 At 0cm	GSM850	32	1.438		**1.44**		
	GSM1900	9	0.869		**0.87**		
	WCDMA V	48	1.363		**1.36**		
	WCDMA II	13	0.83		**0.83**		
Edge4 At 0cm	GSM850	35	0.778	0.193	**0.97**		
	GSM1900	7	1.413	0.193	**1.61**	0.012	#1
	WCDMA V	54	0.429	0.193	**0.62**		
	WCDMA II	20	1.385	0.193	**1.58**		
Bottom Face At 1cm	GSM850	40	1.155	0.0254	**1.18**		
	GSM1900	5	0.452	0.0254	**0.48**		
	WCDMA V	58	0.479	0.0254	**0.50**		
	WCDMA II	28	0.488	0.0254	**0.51**		

Position	WWAN Band	Plot No	Max. Reported SAR (W/kg)	Reported SAR / 1.6	WLAN maximum rated power (dBm)	WLAN antenna gain (dBi)	MPE estimation (mW/cm^2)	MPE estimation / MPE limit	Summation (1)
Edge 3 (0 cm gap)	GSM850	32	1.438	0.899	16.5	3.2	0.02	0.02	**0.92**
	GSM1900	9	0.869	0.543	16.5	3.2	0.02	0.02	**0.56**
	WCDMA V	48	1.363	0.852	16.5	3.2	0.02	0.02	**0.87**
	WCDMA II	13	0.83	0.519	16.5	3.2	0.02	0.02	**0.54**

Note:

1. Per KDB 447498 D01v05, The [Σ of (the highest measured or estimated SAR for each standalone antenna configuration, adjusted for maximum tune-up tolerance) / 1.6 W/kg] + [Σ of MPE ratios] is ≤ 1.0, simultaneous transmission of mixed mobile and portable exposure conditions is compliant.

WWAN + Bluetooth (DSS)

Position	WWAN Band	Plot No	Max. Reported SAR (W/kg)	Bluetooth-DSS Max. Reported SAR (W/kg)	Sum WWAN + Bluetooth (W/kg)	SPLSR ≤ 0.04	Case No
Bottom Face At 0cm	GSM850	30	1.336	0.044	**1.38**		
	GSM1900	1	0.626	0.044	**0.67**		
	WCDMA V	43	1.063	0.044	**1.11**		
	WCDMA II	12	0.928	0.044	**0.97**		
Edge3 At 0cm	GSM850	32	1.438		**1.44**		
	GSM1900	9	0.869		**0.87**		
	WCDMA V	48	1.363		**1.36**		
	WCDMA II	13	0.83		**0.83**		
Edge4 At 0cm	GSM850	35	0.778	0.017	**0.80**		
	GSM1900	7	1.413	0.017	**1.43**		
	WCDMA V	54	0.429	0.017	**0.45**		
	WCDMA II	20	1.385	0.017	**1.40**		
Bottom Face At 1cm	GSM850	40	1.155	0.029	**1.18**		
	GSM1900	5	0.452	0.029	**0.48**		
	WCDMA V	58	0.479	0.029	**0.51**		
	WCDMA II	28	0.488	0.029	**0.52**		

Position	WWAN Band	Plot No	Max. Reported SAR (W/kg)	Reported SAR / 1.6	BT maximum rated power (dBm)	BT antenna gain (dBi)	MPE estimation (mW/cm^2)	MPE estimation / MPE limit	Summation (1)
Edge 3 (0 cm gap)	GSM850	32	1.438	0.899	6	3.2	0.0017	0.0017	**0.90**
	GSM1900	9	0.869	0.543	6	3.2	0.0017	0.0017	**0.54**
	WCDMA V	48	1.363	0.852	6	3.2	0.0017	0.0017	**0.85**
	WCDMA II	13	0.83	0.519	6	3.2	0.0017	0.0017	**0.52**

Note:

1. Per KDB 447498 D01v05, The [Σ of (the highest measured or estimated SAR for each standalone antenna configuration, adjusted for maximum tune-up tolerance) / 1.6 W/kg] + [Σ of MPE ratios] is ≤ 1.0, simultaneous transmission of mixed mobile and portable exposure conditions is compliant.

<Laptop mode>

WWAN + WLAN 2.4GHz

	WWAN				WLAN-DTS				Summation (3)
Position	WWAN Band	Plot No	Max. Reported SAR (W/kg)	Reported SAR / 1.6	WLAN maximum rated power (dBm)	WLAN antenna gain (dBi)	(1)MPE estimation (mW/cm^2)	MPE estimation / MPE limit(2)	
Bottom (0 cm gap)	GSM850	38	1.435	0.897	16.5	3.2	0.02	0.02	**0.92**
	GSM1900	4	0.679	0.424	16.5	3.2	0.02	0.02	**0.44**
	WCDMA V	55	1.063	0.664	16.5	3.2	0.02	0.02	**0.68**
	WCDMA II	26	0.941	0.588	16.5	3.2	0.02	0.02	**0.61**

WWAN + Bluetooth (DSS)

	WWAN				Bluetooth-DSS				Summation (3)
Position	WWAN Band	Plot No	Max. Reported SAR (W/kg)	Reported SAR / 1.6	BT maximum rated power (dBm)	BT antenna gain (dBi)	(1)MPE estimation (mW/cm^2)	MPE estimation / MPE limit(2)	
Bottom (0 cm gap)	GSM850	38	1.435	0.897	6	3.2	0.0017	0.0017	**0.90**
	GSM1900	4	0.679	0.424	6	3.2	0.0017	0.0017	**0.43**
	WCDMA V	55	1.063	0.664	6	3.2	0.0017	0.0017	**0.67**
	WCDMA II	26	0.941	0.588	6	3.2	0.0017	0.0017	**0.59**

Note:

1. In WLAN module C2PC filing, bottom face SAR in laptop mode was not performed due to larger than 20cm separation distance. MPE estimation is at 20cm separation distance.
2. MPE limit for general population in 1.5GHz ~ 100GHz is 1 mW/cm^2
3. Per KDB 447498 D01v05, The [Σ of (the highest measured or estimated SAR for each standalone antenna configuration, adjusted for maximum tune-up tolerance) / 1.6 W/kg] + [Σ of MPE ratios] is ≤ 1.0, simultaneous transmission of mixed mobile and portable exposure conditions is compliant.

12.5 Simultaneous analysis – SPLSR calculation

Case 1											
Plot No	Band	Position	SAR (W/kg)	Gap (cm)	SAR peak location (m)			3D distance (mm)	Pair SAR sum (W/kg)	SPLSR	Simultaneous SAR
					X	Y	Z				
7	GSM1900	Edge4	1.413	0	-0.004	-0.0785	-0.178	167.6	1.61	0.012	Not required
WLAN2.4G Ant Main			0.193	0	0	0.089	-0.177				

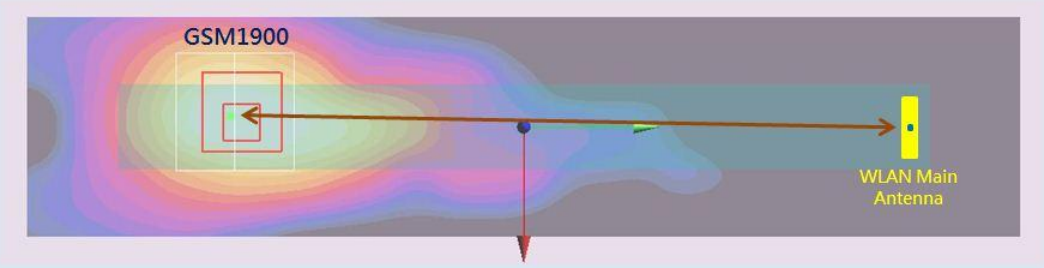

Remark:

1. For edge4 SAR testing, EUT was placed under the flat phantom with the geometric center of device at the middle of the phantom, i.e. with the coordinate x=0, y=0.
2. WWAN zoom SAR peak position coordinates were extracted from the SAR measurement software. WLAN antenna is 8.9 cm to the middle of edge4, illustrated in page27; for the purpose of separation calculation, the WLAN antenna coordinate was set to x=0, y= -0.089 (m).

Test Engineer： Vic Yang, Ted Sun, and Cona Huang

13. Uncertainty Assessment

The component of uncertainly may generally be categorized according to the methods used to evaluate them. The evaluation of uncertainly by the statistical analysis of a series of observations is termed a Type An evaluation of uncertainty. The evaluation of uncertainty by means other than the statistical analysis of a series of observation is termed a Type B evaluation of uncertainty. Each component of uncertainty, however evaluated, is represented by an estimated standard deviation, termed standard uncertainty, which is determined by the positive square root of the estimated variance.

A Type A evaluation of standard uncertainty may be based on any valid statistical method for treating data. This includes calculating the standard deviation of the mean of a series of independent observations; using the method of least squares to fit a curve to the data in order to estimate the parameter of the curve and their standard deviations; or carrying out an analysis of variance in order to identify and quantify random effects in certain kinds of measurement.

A type B evaluation of standard uncertainty is typically based on scientific judgment using all of the relevant information available. These may include previous measurement data, experience, and knowledge of the behavior and properties of relevant materials and instruments, manufacture's specification, data provided in calibration reports and uncertainties assigned to reference data taken from handbooks. Broadly speaking, the uncertainty is either obtained from an outdoor source or obtained from an assumed distribution, such as the normal distribution, rectangular or triangular distributions indicated in Table 12.1

Uncertainty Distributions	Normal	Rectangular	Triangular	U-Shape
Multi-plying Factor[(a)]	1/k[(b)]	$1/\sqrt{3}$	$1/\sqrt{6}$	$1/\sqrt{2}$

(a) standard uncertainty is determined as the product of the multiplying factor and the estimated range of variations in the measured quantity

(b) κ is the coverage factor

Table 12.1 Standard Uncertainty for Assumed Distribution

The combined standard uncertainty of the measurement result represents the estimated standard deviation of the result. It is obtained by combining the individual standard uncertainties of both Type A and Type B evaluation using the usual "root-sum-squares" (RSS) methods of combining standard deviations by taking the positive square root of the estimated variances.

Expanded uncertainty is a measure of uncertainty that defines an interval about the measurement result within which the measured value is confidently believed to lie. It is obtained by multiplying the combined standard uncertainty by a coverage factor. Typically, the coverage factor ranges from 2 to 3. Using a coverage factor allows the true value of a measured quantity to be specified with a defined probability within the specified uncertainty range. For purpose of this document, a coverage factor two is used, which corresponds to confidence interval of about 95 %. The DASY uncertainty Budget is shown in the following tables:

Error Description	Uncertainty Value (±%)	Probability Distribution	Divisor	Ci (1g)	Ci (10g)	Standard Uncertainty (1g)	Standard Uncertainty (10g)
Measurement System							
Probe Calibration	6.0	Normal	1	1	1	± 6.0 %	± 6.0 %
Axial Isotropy	4.7	Rectangular	√3	0.7	0.7	± 1.9 %	± 1.9 %
Hemispherical Isotropy	9.6	Rectangular	√3	0.7	0.7	± 3.9 %	± 3.9 %
Boundary Effects	1.0	Rectangular	√3	1	1	± 0.6 %	± 0.6 %
Linearity	4.7	Rectangular	√3	1	1	± 2.7 %	± 2.7 %
System Detection Limits	1.0	Rectangular	√3	1	1	± 0.6 %	± 0.6 %
Readout Electronics	0.3	Normal	1	1	1	± 0.3 %	± 0.3 %
Response Time	0.8	Rectangular	√3	1	1	± 0.5 %	± 0.5 %
Integration Time	2.6	Rectangular	√3	1	1	± 1.5 %	± 1.5 %
RF Ambient Noise	3.0	Rectangular	√3	1	1	± 1.7 %	± 1.7 %
RF Ambient Reflections	3.0	Rectangular	√3	1	1	± 1.7 %	± 1.7 %
Probe Positioner	0.4	Rectangular	√3	1	1	± 0.2 %	± 0.2 %
Probe Positioning	2.9	Rectangular	√3	1	1	± 1.7 %	± 1.7 %
Max. SAR Eval.	1.0	Rectangular	√3	1	1	± 0.6 %	± 0.6 %
Test Sample Related							
Device Positioning	2.9	Normal	1	1	1	± 2.9 %	± 2.9 %
Device Holder	3.6	Normal	1	1	1	± 3.6 %	± 3.6 %
Power Drift	5.0	Rectangular	√3	1	1	± 2.9 %	± 2.9 %
Phantom and Setup							
Phantom Uncertainty	4.0	Rectangular	√3	1	1	± 2.3 %	± 2.3 %
Liquid Conductivity (Target)	5.0	Rectangular	√3	0.64	0.43	± 1.8 %	± 1.2 %
Liquid Conductivity (Meas.)	2.5	Normal	1	0.64	0.43	± 1.6 %	± 1.1 %
Liquid Permittivity (Target)	5.0	Rectangular	√3	0.6	0.49	± 1.7 %	± 1.4 %
Liquid Permittivity (Meas.)	2.5	Normal	1	0.6	0.49	± 1.5 %	± 1.2 %
Combined Standard Uncertainty						± 11.0 %	± 10.8 %
Coverage Factor for 95 %						K=2	
Expanded Uncertainty						**± 22.0 %**	**± 21.5 %**

Table 12.2 Uncertainty Budget of DASY for frequency range 300 MHz to 3 GHz

14. References

[1] FCC 47 CFR Part 2 “Frequency Allocations and Radio Treaty Matters; General Rules and Regulations”

[2] ANSI/IEEE Std. C95.1-1992, “IEEE Standard for Safety Levels with Respect to Human Exposure to Radio Frequency Electromagnetic Fields, 3 kHz to 300 GHz”, September 1992

[3] IEEE Std. 1528-2003, “Recommended Practice for Determining the Peak Spatial-Average Specific Absorption Rate (SAR) in the Human Head from Wireless Communications Devices: Measurement Techniques”, December 2003

[4] FCC OET Bulletin 65 (Edition 97-01) Supplement C (Edition 01-01), “Evaluating Compliance with FCC Guidelines for Human Exposure to Radiofrequency Electromagnetic Fields”, June 2001

[5] SPEAG DASY System Handbook

[6] FCC KDB 447498 D01 v05, “Mobile and Portable Device RF Exposure Procedures and Equipment Authorization Policies”, October 2012

[7] FCC KDB 616217 D04 v01, “SAR Evaluation Considerations for Laptop, Notebook, Netbook and Tablet Computers”, October 2012

[8] FCC KDB 941225 D01 v02, “SAR Measurement Procedures for 3G Devices – CDMA 2000 / Ev-Do / WCDMA / HSDPA / HSPA”, October 2007

[9] FCC KDB 941225 D03 v01, “Recommended SAR Test Reduction Procedures for GSM / GPRS / EDGE”, December 2008

Appendix A. Plots of System Performance Check

The plots are shown as follows.

Test Laboratory: Sporton International Inc. SAR/HAC Testing Lab Date: 2012/12/15

System Check_Body_835MHz_121215

DUT: D835V2-SN:499

Communication System: CW; Frequency: 835 MHz;Duty Cycle: 1:1
Medium: MSL_850_121215 Medium parameters used: f = 835 MHz; σ = 0.963 mho/m; ε_r = 54.5; ρ = 1000 kg/m^3
Ambient Temperature：22.4 ℃； Liquid Temperature：21.4 ℃

DASY5 Configuration:
- Probe: ET3DV6 - SN1787; ConvF(6.08, 6.08, 6.08); Calibrated: 2012/5/29;
- Sensor-Surface: 4mm (Mechanical Surface Detection)
- Electronics: DAE3 Sn495; Calibrated: 2012/4/23
- Phantom: ELI v4.0; Type: QDOVA001BB; Serial: TP:1127
- Measurement SW: DASY52, Version 52.8 (3); SEMCAD X Version 14.6.5 (6469)

Configuration/Pin=250mW/Area Scan (61x61x1): Measurement grid: dx=15mm, dy=15mm
Maximum value of SAR (interpolated) = 2.71 mW/g

Configuration/Pin=250mW/Zoom Scan (5x5x7)/Cube 0: Measurement grid: dx=8mm, dy=8mm, dz=5mm
Reference Value = 55.138 V/m; Power Drift = 0.00 dB
Peak SAR (extrapolated) = 3.548 mW/g
SAR(1 g) = 2.5 mW/g; SAR(10 g) = 1.66 mW/g
Maximum value of SAR (measured) = 2.70 mW/g

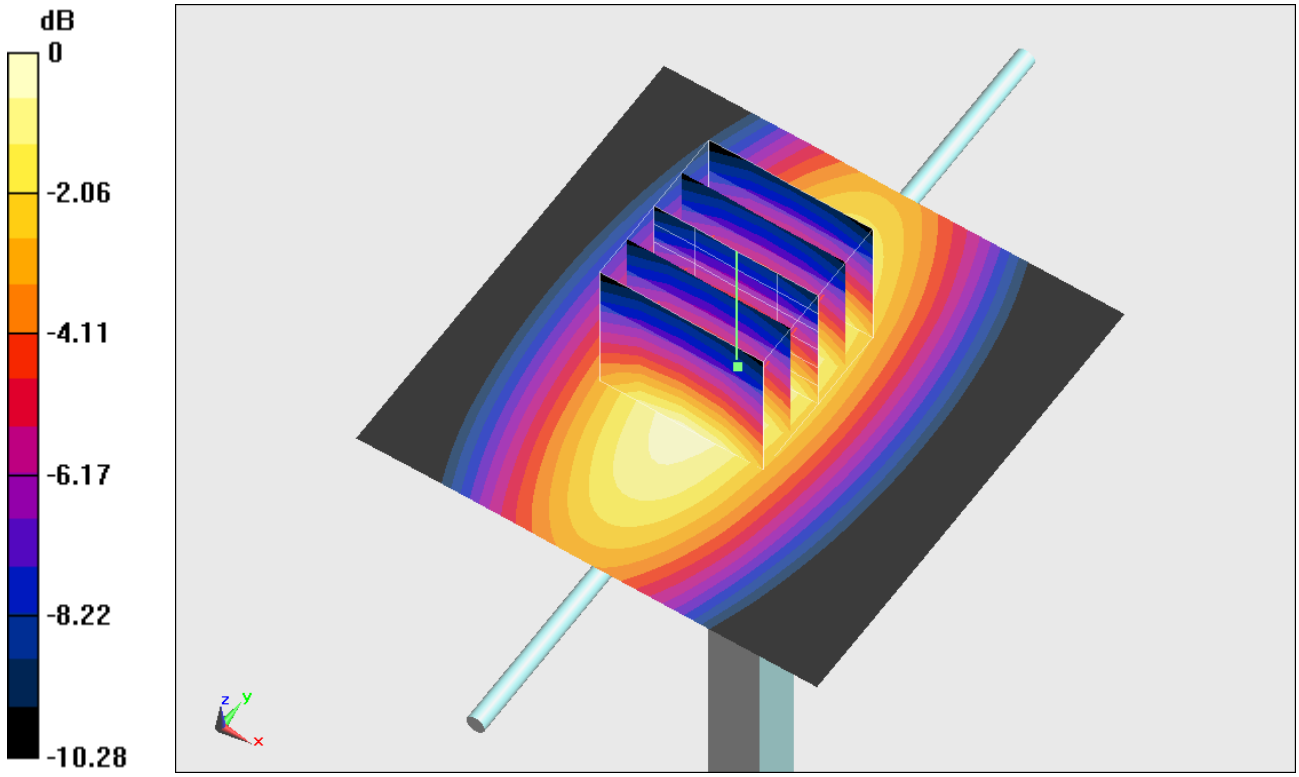

0 dB = 2.70 mW/g = 8.63 dB mW/g

Test Laboratory: Sporton International Inc. SAR/HAC Testing Lab Date: 2012/12/14

System Check_Body_1900MHz_121214

DUT: D1900V2-SN:5d041

Communication System: CW; Frequency: 1900 MHz;Duty Cycle: 1:1
Medium: MSL_1900_121214 Medium parameters used: f = 1900 MHz; σ = 1.531 mho/m; ε_r = 54.169; ρ = 1000 kg/m^3
Ambient Temperature：22.5 ℃； Liquid Temperature：21.5 ℃

DASY5 Configuration:
- Probe: ET3DV6 - SN1787; ConvF(4.58, 4.58, 4.58); Calibrated: 2012/5/29;
- Sensor-Surface: 4mm (Mechanical Surface Detection)
- Electronics: DAE3 Sn495; Calibrated: 2012/4/23
- Phantom: ELI v5.0 Left; Type: QDOVA002AA; Serial: TP:1131
- Measurement SW: DASY52, Version 52.8 (3); SEMCAD X Version 14.6.5 (6469)

Configuration/Pin=250mW/Area Scan (61x61x1): Measurement grid: dx=15mm, dy=15mm
Maximum value of SAR (interpolated) = 11.2 mW/g

Configuration/Pin=250mW/Zoom Scan (5x5x7)/Cube 0: Measurement grid: dx=8mm, dy=8mm, dz=5mm
Reference Value = 91.543 V/m; Power Drift = 0.02 dB
Peak SAR (extrapolated) = 14.907 mW/g
SAR(1 g) = 9.91 mW/g; SAR(10 g) = 5.69 mW/g
Maximum value of SAR (measured) = 10.9 mW/g

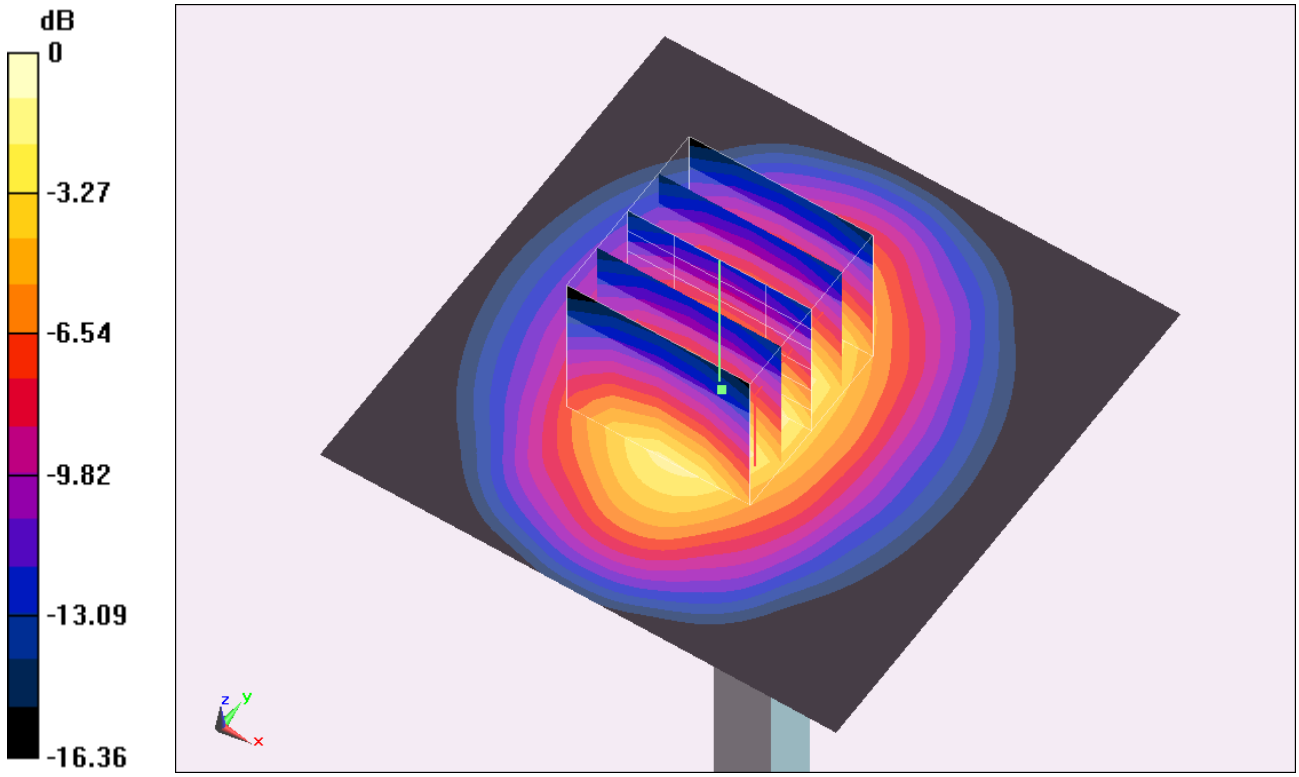

0 dB = 10.9 mW/g = 20.75 dB mW/g

Appendix B. Plots of SAR Measurement

The plots are shown as follows.

#29_GSM850_GPRS (2 Tx slots)_Bottom Face_0cm_Ch128

DUT: 2N2103-02

Communication System: GSM850; Frequency: 824.2 MHz;Duty Cycle: 1:4
Medium: MSL_850_121215 Medium parameters used: f = 824.2 MHz; σ = 0.953 mho/m; ε_r = 54.624; ρ = 1000 kg/m^3
Ambient Temperature：22.4 ℃； Liquid Temperature：21.4 ℃

DASY5 Configuration:
- Probe: ET3DV6 - SN1787; ConvF(6.08, 6.08, 6.08); Calibrated: 2012/5/29;
- Sensor-Surface: 4mm (Mechanical Surface Detection)
- Electronics: DAE3 Sn495; Calibrated: 2012/4/23
- Phantom: ELI v4.0; Type: QDOVA001BB; Serial: TP:1127
- Measurement SW: DASY52, Version 52.8 (3); SEMCAD X Version 14.6.5 (6469)

Configuration/Ch128/Area Scan (171x211x1): Measurement grid: dx=15mm, dy=15mm
Maximum value of SAR (interpolated) = 1.95 mW/g

Configuration/Ch128/Zoom Scan (5x5x7)/Cube 0: Measurement grid: dx=8mm, dy=8mm, dz=5mm
Reference Value = 30.204 V/m; Power Drift = 0.13 dB
Peak SAR (extrapolated) = 1.669 mW/g
SAR(1 g) = 1.04 mW/g; SAR(10 g) = 0.661 mW/g
Maximum value of SAR (measured) = 1.17 mW/g

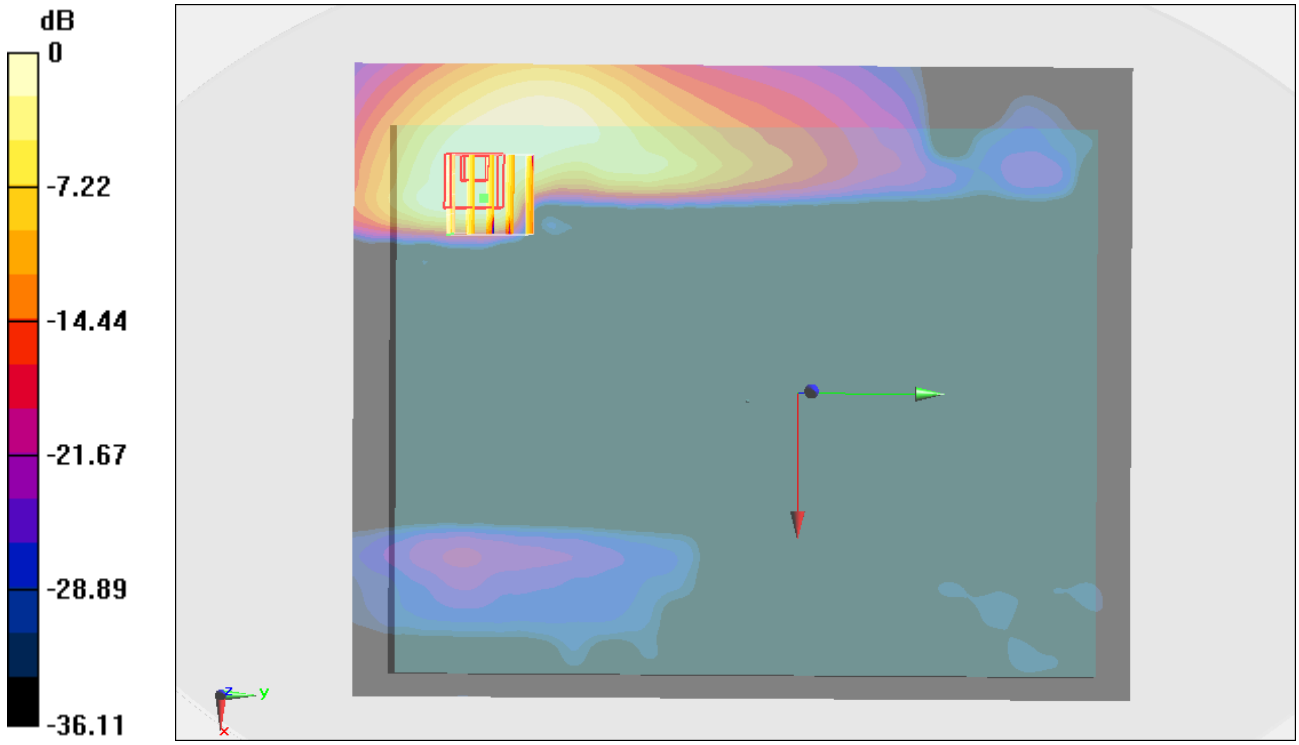

0 dB = 1.17 mW/g = 1.36 dB mW/g

#30_GSM850_GPRS (2 Tx slots)_Bottom Face_0cm_Ch189

DUT: 2N2103-02

Communication System: GSM850; Frequency: 836.4 MHz;Duty Cycle: 1:4
Medium: MSL_850_121215 Medium parameters used: f = 836.4 MHz; σ = 0.965 mho/m; ε_r = 54.478; ρ = 1000 kg/m^3
Ambient Temperature：22.4 ℃； Liquid Temperature：21.4 ℃

DASY5 Configuration:
- Probe: ET3DV6 - SN1787; ConvF(6.08, 6.08, 6.08); Calibrated: 2012/5/29;
- Sensor-Surface: 4mm (Mechanical Surface Detection)
- Electronics: DAE3 Sn495; Calibrated: 2012/4/23
- Phantom: ELI v4.0; Type: QDOVA001BB; Serial: TP:1127
- Measurement SW: DASY52, Version 52.8 (3); SEMCAD X Version 14.6.5 (6469)

Configuration/Ch189/Area Scan (81x91x1): Measurement grid: dx=15mm, dy=15mm
Maximum value of SAR (interpolated) = 1.45 mW/g

Configuration/Ch189/Zoom Scan (5x5x7)/Cube 0: Measurement grid: dx=8mm, dy=8mm, dz=5mm
Reference Value = 36.390 V/m; Power Drift = -0.04 dB
Peak SAR (extrapolated) = 1.831 mW/g
SAR(1 g) = 1.14 mW/g; SAR(10 g) = 0.623 mW/g
Maximum value of SAR (measured) = 1.20 mW/g

Configuration/Ch189/Zoom Scan (5x5x7)/Cube 1: Measurement grid: dx=8mm, dy=8mm, dz=5mm
Reference Value = 36.390 V/m; Power Drift = -0.04 dB
Peak SAR (extrapolated) = 1.657 mW/g
SAR(1 g) = 1.12 mW/g; SAR(10 g) = 0.710 mW/g
Maximum value of SAR (measured) = 1.22 mW/g

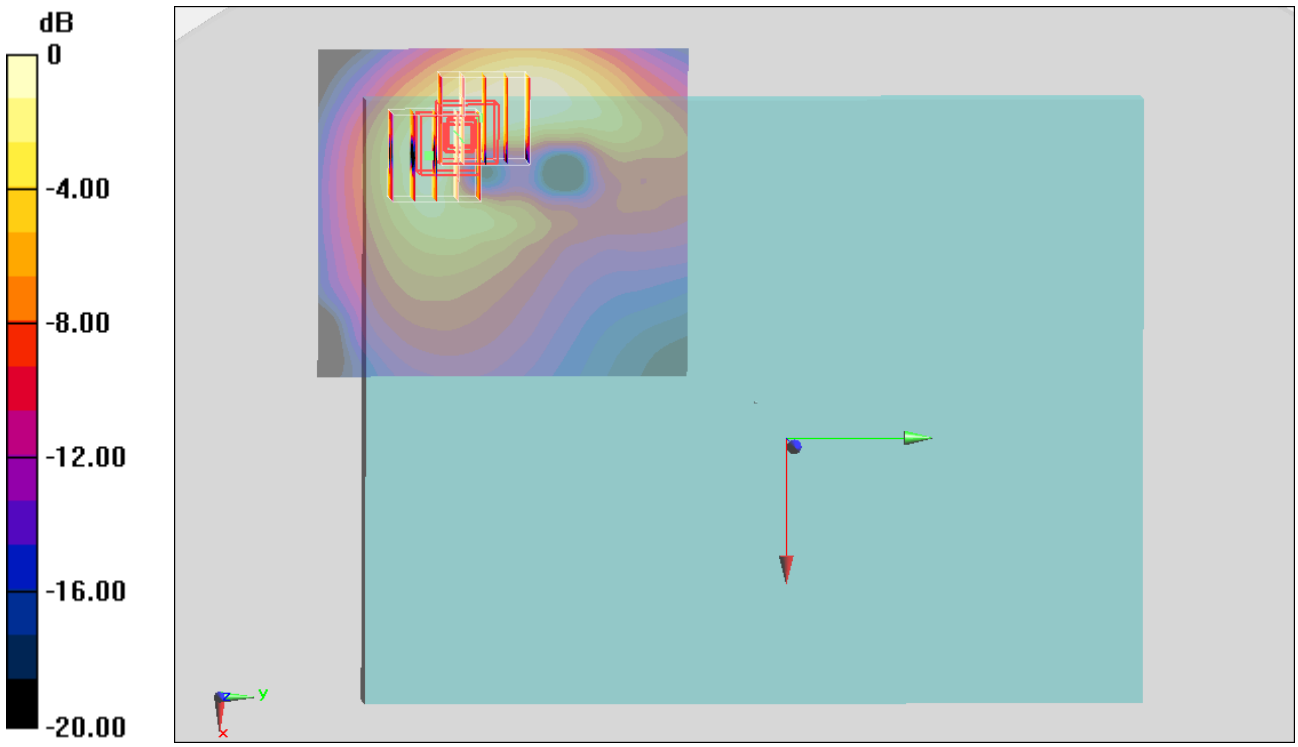

0 dB = 1.22 mW/g = 1.73 dB mW/g

#31_GSM850_GPRS (2 Tx slots)_Bottom Face_0cm_Ch251

DUT: 2N2103-02

Communication System: GSM850; Frequency: 848.8 MHz;Duty Cycle: 1:4
Medium: MSL_850_121215 Medium parameters used: f = 849 MHz; σ = 0.976 mho/m; ε_r = 54.358; ρ = 1000 kg/m^3
Ambient Temperature：22.4 ℃； Liquid Temperature：21.4 ℃

DASY5 Configuration:
- Probe: ET3DV6 - SN1787; ConvF(6.08, 6.08, 6.08); Calibrated: 2012/5/29;
- Sensor-Surface: 4mm (Mechanical Surface Detection)
- Electronics: DAE3 Sn495; Calibrated: 2012/4/23
- Phantom: ELI v4.0; Type: QDOVA001BB; Serial: TP:1127
- Measurement SW: DASY52, Version 52.8 (3); SEMCAD X Version 14.6.5 (6469)

Configuration/Ch251/Area Scan (81x91x1): Measurement grid: dx=15mm, dy=15mm
Maximum value of SAR (interpolated) = 1.68 mW/g

Configuration/Ch251/Zoom Scan (5x5x7)/Cube 0: Measurement grid: dx=8mm, dy=8mm, dz=5mm
Reference Value = 35.116 V/m; Power Drift = -0.01 dB
Peak SAR (extrapolated) = 1.761 mW/g
SAR(1 g) = 1.08 mW/g; SAR(10 g) = 0.638 mW/g
Maximum value of SAR (measured) = 1.15 mW/g

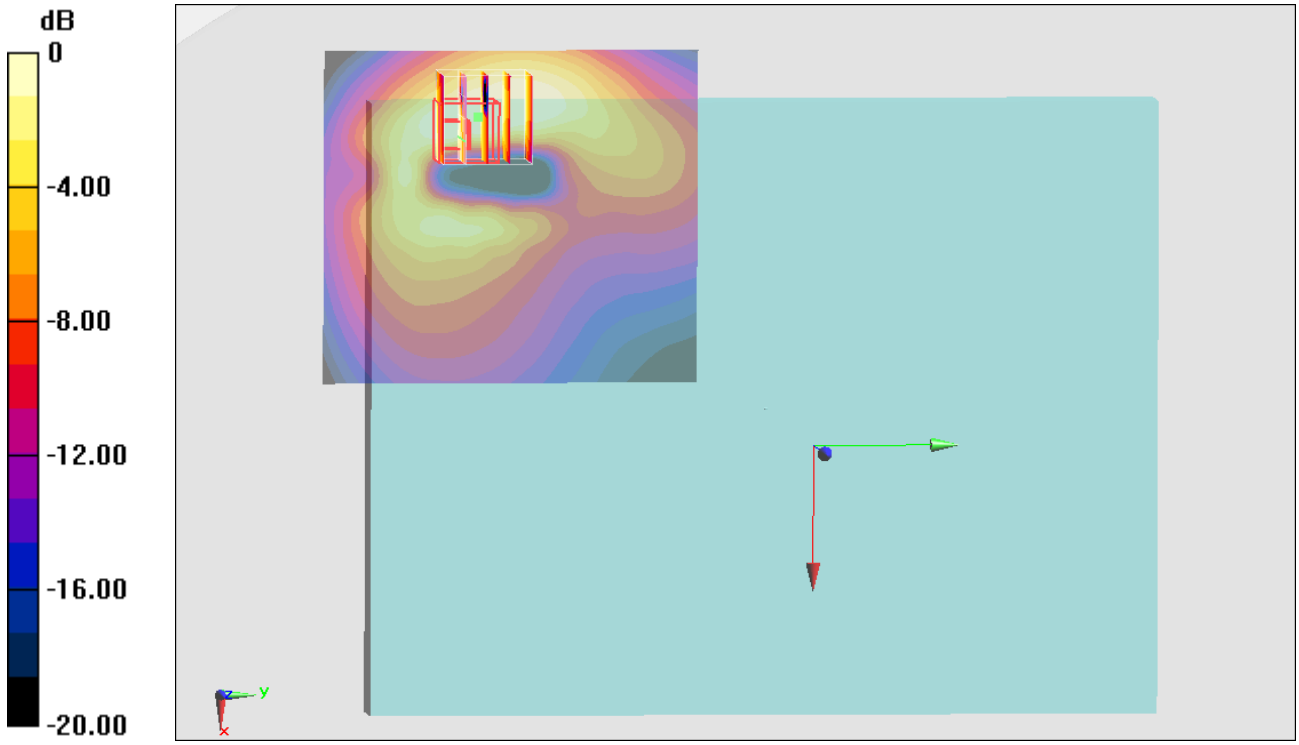

0 dB = 1.15 mW/g = 1.21 dB mW/g

#32_GSM850_GPRS (2 Tx slots)_Edge 3_0cm_Ch128

DUT: 2N2103-02

Communication System: GSM850; Frequency: 824.2 MHz;Duty Cycle: 1:4
Medium: MSL_850_121215 Medium parameters used : f = 824.2 MHz; σ = 0.953 mho/m; ε_r = 54.624; ρ = 1000 kg/m^3
Ambient Temperature：22.4 ℃； Liquid Temperature：21.4 ℃

DASY5 Configuration:
- Probe: ET3DV6 - SN1787; ConvF(6.08, 6.08, 6.08); Calibrated: 2012/5/29;
- Sensor-Surface: 4mm (Mechanical Surface Detection)
- Electronics: DAE3 Sn495; Calibrated: 2012/4/23
- Phantom: ELI v4.0; Type: QDOVA001BB; Serial: TP:1127
- Measurement SW: DASY52, Version 52.8 (3); SEMCAD X Version 14.6.5 (6469)

Configuration/Ch128/Area Scan (41x211x1): Measurement grid: dx=15mm, dy=15mm
Maximum value of SAR (interpolated) = 1.46 mW/g

Configuration/Ch128/Zoom Scan (5x5x7)/Cube 0: Measurement grid: dx=8mm, dy=8mm, dz=5mm
Reference Value = 4.272 V/m; Power Drift = 0.05 dB
Peak SAR (extrapolated) = 2.288 mW/g
SAR(1 g) = 1.23 mW/g; SAR(10 g) = 0.647 mW/g
Maximum value of SAR (measured) = 1.42 mW/g

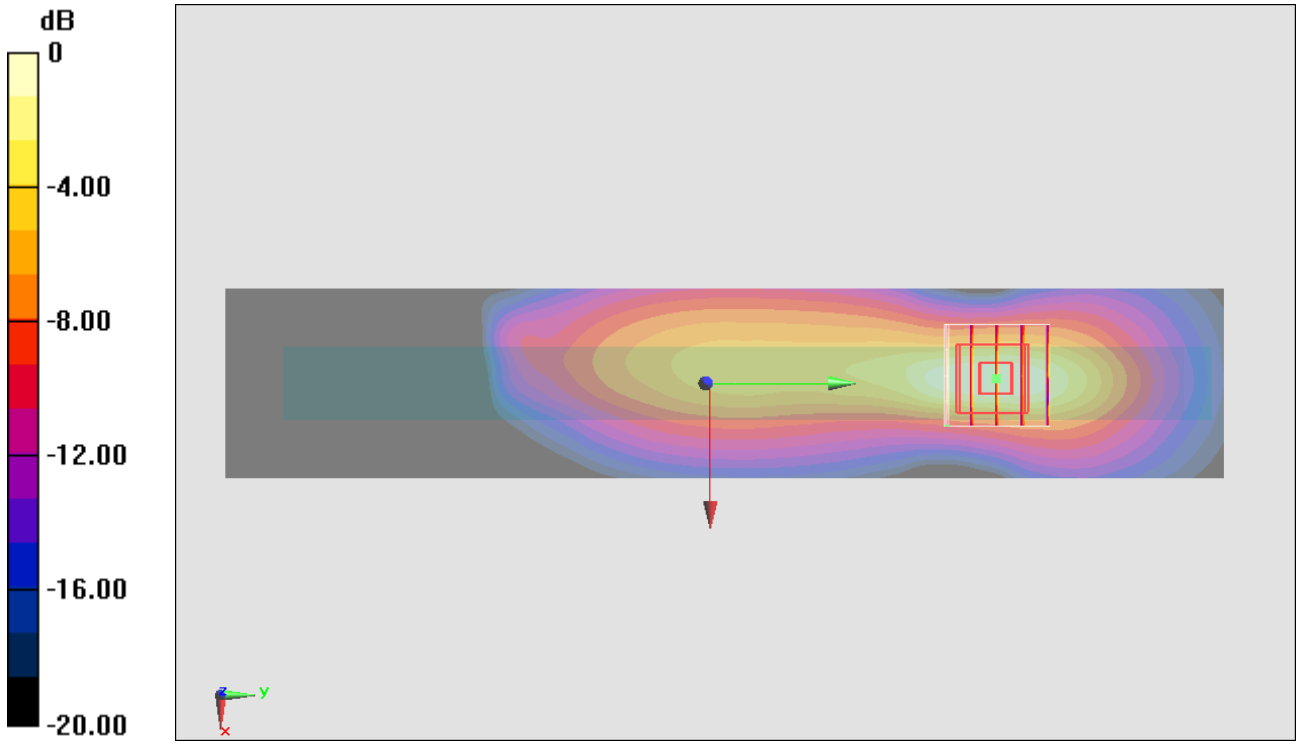

0 dB = 1.42 mW/g = 3.05 dB mW/g

Test Laboratory: Sporton International Inc. SAR/HAC Testing Lab Date: 2012/12/15

#32_GSM850_GPRS (2 Tx slots)_Edge 3_0cm_Ch128_2D

DUT: 2N2103-02

Communication System: GSM850; Frequency: 824.2 MHz;Duty Cycle: 1:4
Medium: MSL_850_121215 Medium parameters used : f = 824.2 MHz; σ = 0.953 mho/m; ε_r = 54.624; ρ = 1000 kg/m^3
Ambient Temperature：22.4 ℃; Liquid Temperature：21.4 ℃

DASY5 Configuration:
- Probe: ET3DV6 - SN1787; ConvF(6.08, 6.08, 6.08); Calibrated: 2012/5/29;
- Sensor-Surface: 4mm (Mechanical Surface Detection)
- Electronics: DAE3 Sn495; Calibrated: 2012/4/23
- Phantom: ELI v4.0; Type: QDOVA001BB; Serial: TP:1127
- Measurement SW: DASY52, Version 52.8 (3); SEMCAD X Version 14.6.5 (6469)

Configuration/Ch128/Area Scan (41x211x1): Measurement grid: dx=15mm, dy=15mm
Maximum value of SAR (interpolated) = 1.46 mW/g

Configuration/Ch128/Zoom Scan (5x5x7)/Cube 0: Measurement grid: dx=8mm, dy=8mm, dz=5mm
Reference Value = 4.272 V/m; Power Drift = 0.05 dB
Peak SAR (extrapolated) = 2.288 mW/g
SAR(1 g) = 1.23 mW/g; SAR(10 g) = 0.647 mW/g
Maximum value of SAR (measured) = 1.42 mW/g

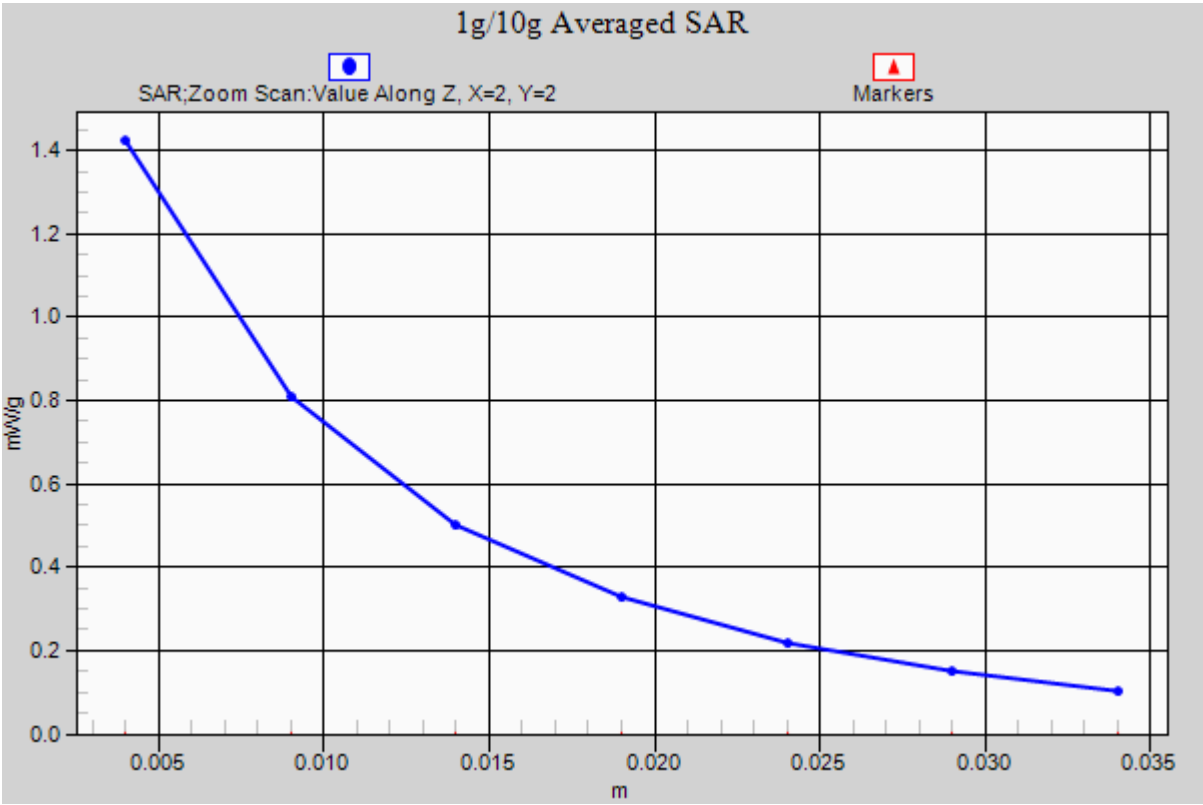

#59_GSM850_GPRS (2 Tx slots)_Edge 3_0cm_Ch128_Repeat

DUT: 2N2103-02

Communication System: GSM850; Frequency: 824.2 MHz;Duty Cycle: 1:4
Medium: MSL_850_121215 Medium parameters used : f = 824.2 MHz; σ = 0.953 mho/m; ε_r = 54.624; ρ = 1000 kg/m^3
Ambient Temperature：22.4 ℃； Liquid Temperature：21.4 ℃

DASY5 Configuration:
- Probe: ET3DV6 - SN1787; ConvF(6.08, 6.08, 6.08); Calibrated: 2012/5/29;
- Sensor-Surface: 4mm (Mechanical Surface Detection)
- Electronics: DAE3 Sn495; Calibrated: 2012/4/23
- Phantom: ELI v4.0; Type: QDOVA001BB; Serial: TP:1127
- Measurement SW: DASY52, Version 52.8 (3); SEMCAD X Version 14.6.5 (6469)

Configuration/Ch128/Area Scan (41x211x1): Measurement grid: dx=15mm, dy=15mm
Maximum value of SAR (interpolated) = 1.32 mW/g

Configuration/Ch128/Zoom Scan (5x5x7)/Cube 0: Measurement grid: dx=8mm, dy=8mm, dz=5mm
Reference Value = 4.118 V/m; Power Drift = 0.124 dB
Peak SAR (extrapolated) = 2.925 mW/g
SAR(1 g) = 1.19 mW/g; SAR(10 g) = 0.461 mW/g
Maximum value of SAR (measured) = 1.23 mW/g

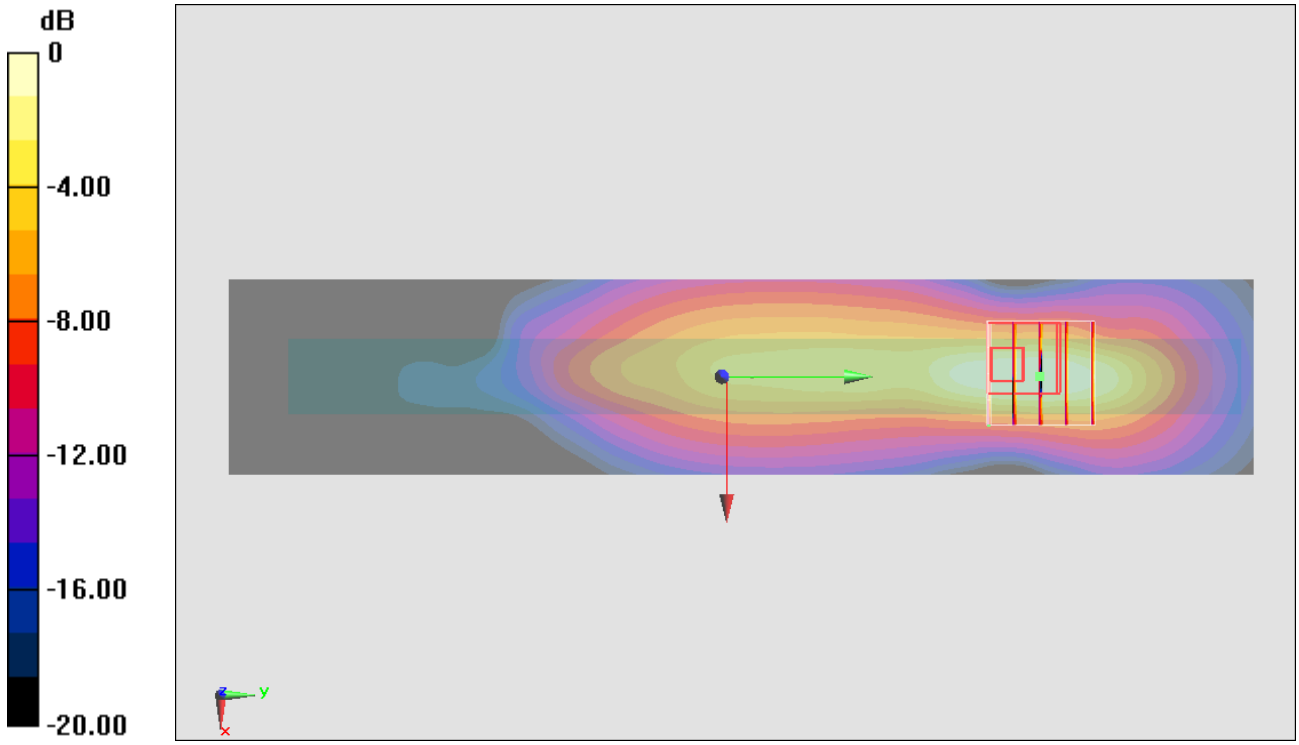

0 dB = 1.23 mW/g = 1.80 dB mW/g

#33_GSM850_GPRS (2 Tx slots)_Edge 3_0cm_Ch189

DUT: 2N2103-02

Communication System: GSM850; Frequency: 836.4 MHz;Duty Cycle: 1:4
Medium: MSL_850_121215 Medium parameters used : f = 836.4 MHz; σ = 0.965 mho/m; ε_r = 54.478; ρ = 1000 kg/m^3
Ambient Temperature：22.4 ℃； Liquid Temperature：21.4 ℃

DASY5 Configuration:
- Probe: ET3DV6 - SN1787; ConvF(6.08, 6.08, 6.08); Calibrated: 2012/5/29;
- Sensor-Surface: 4mm (Mechanical Surface Detection)
- Electronics: DAE3 Sn495; Calibrated: 2012/4/23
- Phantom: ELI v4.0; Type: QDOVA001BB; Serial: TP:1127
- Measurement SW: DASY52, Version 52.8 (3); SEMCAD X Version 14.6.5 (6469)

Configuration/Ch189/Area Scan (41x211x1): Measurement grid: dx=15mm, dy=15mm
Maximum value of SAR (interpolated) = 1.27 mW/g

Configuration/Ch189/Zoom Scan (5x5x7)/Cube 0: Measurement grid: dx=8mm, dy=8mm, dz=5mm
Reference Value = 4.250 V/m; Power Drift = 0.03 dB
Peak SAR (extrapolated) = 2.132 mW/g
SAR(1 g) = 1.11 mW/g; SAR(10 g) = 0.581 mW/g
Maximum value of SAR (measured) = 1.13 mW/g

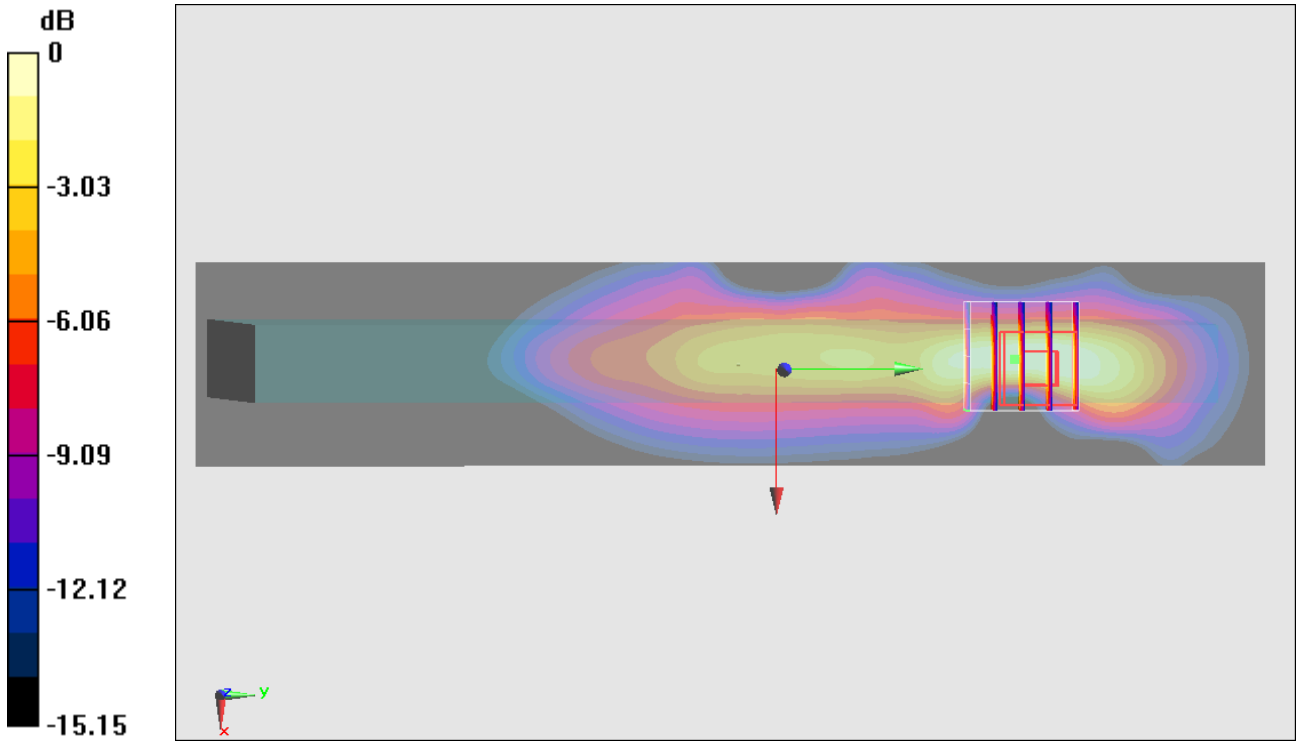

0 dB = 1.13 mW/g = 1.06 dB mW/g

#34_GSM850_GPRS (2 Tx slots)_Edge 3_0cm_Ch251

DUT: 2N2103-02

Communication System: GSM850; Frequency: 848.8 MHz;Duty Cycle: 1:4
Medium: MSL_850_121215 Medium parameters used: f = 849 MHz; σ = 0.976 mho/m; ε_r = 54.358; ρ = 1000 kg/m^3
Ambient Temperature：22.4 ℃； Liquid Temperature：21.4 ℃

DASY5 Configuration:
- Probe: ET3DV6 - SN1787; ConvF(6.08, 6.08, 6.08); Calibrated: 2012/5/29;
- Sensor-Surface: 4mm (Mechanical Surface Detection)
- Electronics: DAE3 Sn495; Calibrated: 2012/4/23
- Phantom: ELI v4.0; Type: QDOVA001BB; Serial: TP:1127
- Measurement SW: DASY52, Version 52.8 (3); SEMCAD X Version 14.6.5 (6469)

Configuration/Ch251/Area Scan (41x211x1): Measurement grid: dx=15mm, dy=15mm
Maximum value of SAR (interpolated) = 1.05 mW/g

Configuration/Ch251/Zoom Scan (5x5x7)/Cube 0: Measurement grid: dx=8mm, dy=8mm, dz=5mm
Reference Value = 3.627 V/m; Power Drift = 0.07 dB
Peak SAR (extrapolated) = 1.744 mW/g
SAR(1 g) = 0.926 mW/g; SAR(10 g) = 0.480 mW/g
Maximum value of SAR (measured) = 1.05 mW/g

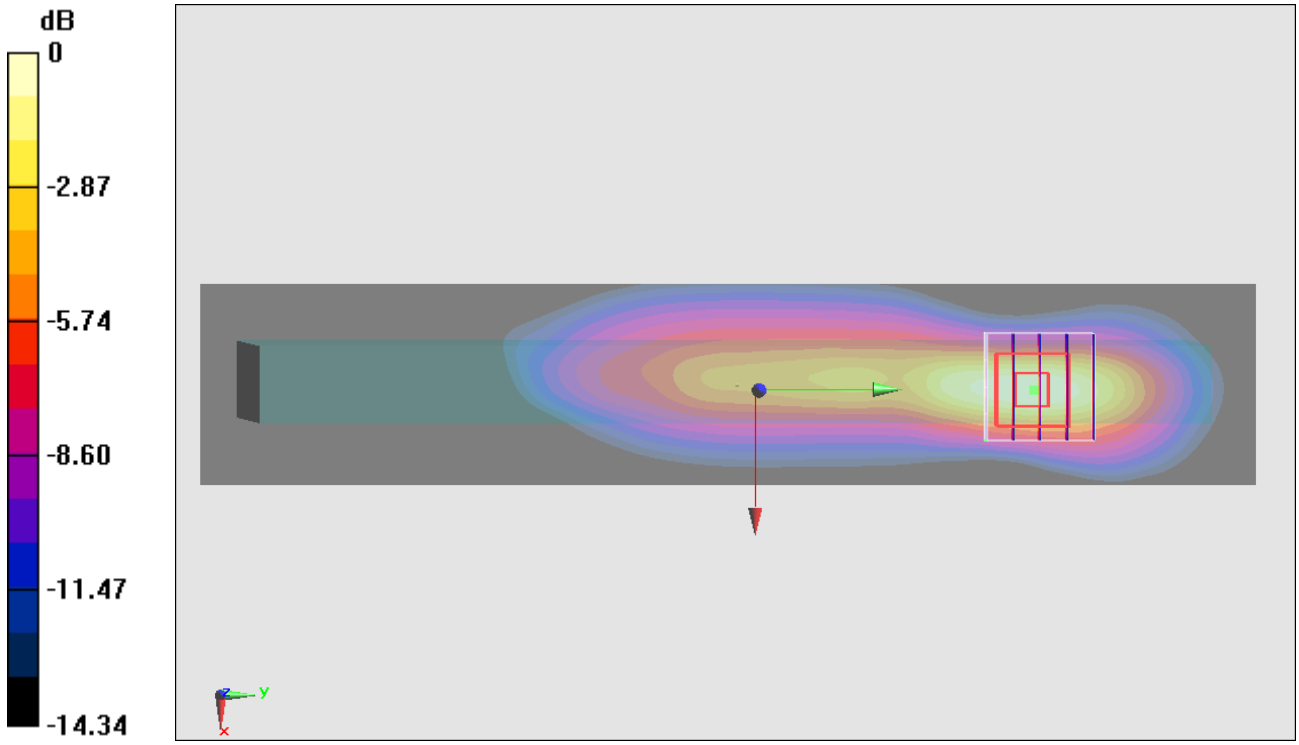

0 dB = 1.05 mW/g = 0.42 dB mW/g

#35_GSM850_GPRS (2 Tx slots)_Edge 4_0cm_Ch128

DUT: 2N2103-02

Communication System: GSM850; Frequency: 824.2 MHz;Duty Cycle: 1:4
Medium: MSL_850_121215 Medium parameters used : f = 824.2 MHz; σ = 0.953 mho/m; ε_r = 54.624; ρ = 1000 kg/m^3
Ambient Temperature：22.4 ℃； Liquid Temperature：21.4 ℃

DASY5 Configuration:
- Probe: ET3DV6 - SN1787; ConvF(6.08, 6.08, 6.08); Calibrated: 2012/5/29;
- Sensor-Surface: 4mm (Mechanical Surface Detection)
- Electronics: DAE3 Sn495; Calibrated: 2012/4/23
- Phantom: ELI v4.0; Type: QDOVA001BB; Serial: TP:1127
- Measurement SW: DASY52, Version 52.8 (3); SEMCAD X Version 14.6.5 (6469)

Configuration/Ch128/Area Scan (41x181x1): Measurement grid: dx=15mm, dy=15mm
Maximum value of SAR (interpolated) = 0.672 mW/g

Configuration/Ch128/Zoom Scan (5x5x7)/Cube 0: Measurement grid: dx=8mm, dy=8mm, dz=5mm
Reference Value = 0.455 V/m; Power Drift = -0.065 dB
Peak SAR (extrapolated) = 1.257 mW/g
SAR(1 g) = 0.665 mW/g; SAR(10 g) = 0.387 mW/g
Maximum value of SAR (measured) = 0.771 mW/g

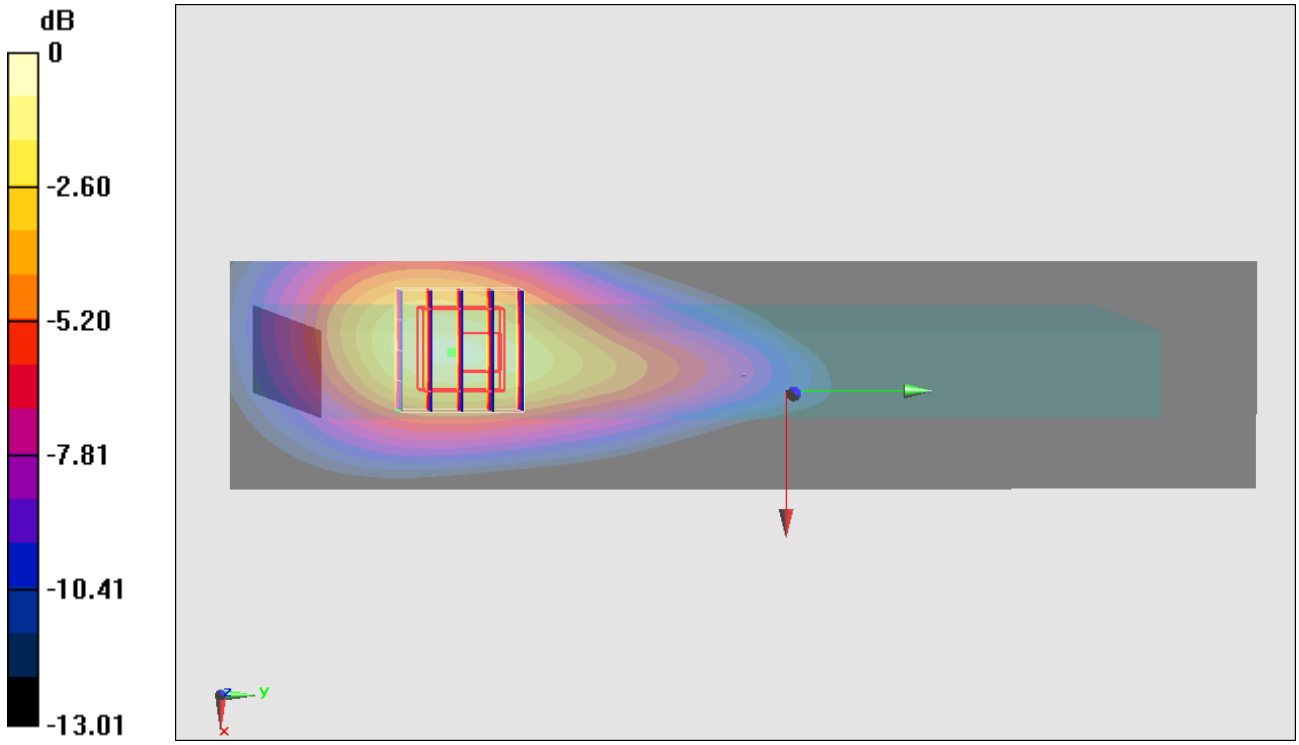

0 dB = 0.771 mW/g = -2.26 dB mW/g

#36_GSM850_GPRS (2 Tx slots)_Bottom_0cm_Ch128

DUT: 2N2103-02

Communication System: GSM850; Frequency: 824.2 MHz;Duty Cycle: 1:4
Medium: MSL_850_121215 Medium parameters used : f = 824.2 MHz; σ = 0.953 mho/m; ε_r = 54.624; ρ = 1000 kg/m^3
Ambient Temperature：22.4 ℃； Liquid Temperature：21.4 ℃

DASY5 Configuration:
- Probe: ET3DV6 - SN1787; ConvF(6.08, 6.08, 6.08); Calibrated: 2012/5/29;
- Sensor-Surface: 4mm (Mechanical Surface Detection)
- Electronics: DAE3 Sn495; Calibrated: 2012/4/23
- Phantom: ELI v4.0; Type: QDOVA001BB; Serial: TP:1127
- Measurement SW: DASY52, Version 52.8 (3); SEMCAD X Version 14.6.5 (6469)

Configuration/Ch128/Area Scan (81x101x1): Measurement grid: dx=15mm, dy=15mm
Maximum value of SAR (interpolated) = 1.19 mW/g

Configuration/Ch128/Zoom Scan (5x5x7)/Cube 0: Measurement grid: dx=8mm, dy=8mm, dz=5mm
Reference Value = 3.171 V/m; Power Drift = 0.03 dB
Peak SAR (extrapolated) = 1.622 mW/g
SAR(1 g) = 1.06 mW/g; SAR(10 g) = 0.666 mW/g
Maximum value of SAR (measured) = 1.16 mW/g

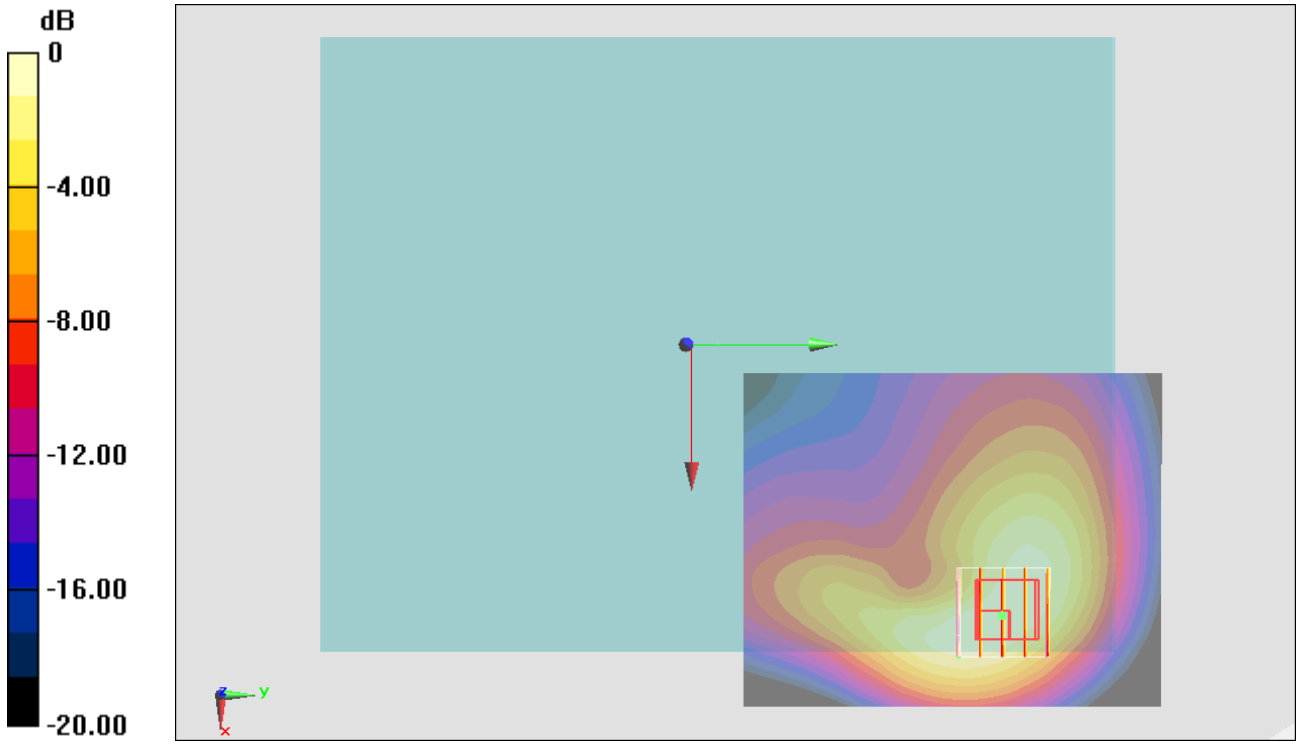

0 dB = 1.16 mW/g = 1.29 dB mW/g

#37_GSM850_GPRS (2 Tx slots)_Bottom_0cm_Ch189

DUT: 2N2103-02

Communication System: GSM850; Frequency: 836.4 MHz;Duty Cycle: 1:4
Medium: MSL_850_121215 Medium parameters used : f = 836.4 MHz; σ = 0.965 mho/m; ε_r = 54.478; ρ = 1000 kg/m^3
Ambient Temperature：22.4 ℃； Liquid Temperature：21.4 ℃

DASY5 Configuration:
- Probe: ET3DV6 - SN1787; ConvF(6.08, 6.08, 6.08); Calibrated: 2012/5/29;
- Sensor-Surface: 4mm (Mechanical Surface Detection)
- Electronics: DAE3 Sn495; Calibrated: 2012/4/23
- Phantom: ELI v4.0; Type: QDOVA001BB; Serial: TP:1127
- Measurement SW: DASY52, Version 52.8 (3); SEMCAD X Version 14.6.5 (6469)

Configuration/Ch189/Area Scan (81x101x1): Measurement grid: dx=15mm, dy=15mm
Maximum value of SAR (interpolated) = 1.32 mW/g

Configuration/Ch189/Zoom Scan (5x5x7)/Cube 0: Measurement grid: dx=8mm, dy=8mm, dz=5mm
Reference Value = 3.176 V/m; Power Drift = 0.125 dB
Peak SAR (extrapolated) = 1.890 mW/g
SAR(1 g) = 1.18 mW/g; SAR(10 g) = 0.732 mW/g
Maximum value of SAR (measured) = 1.31 mW/g

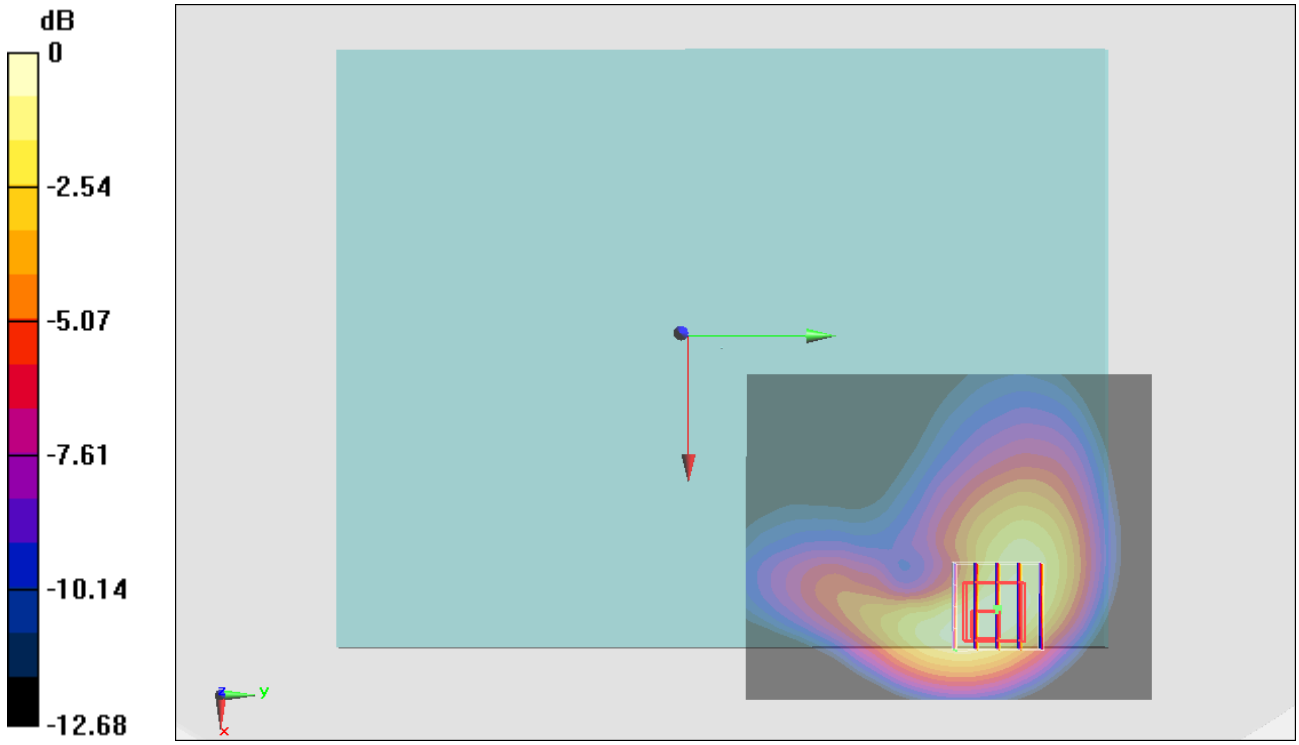

0 dB = 1.31 mW/g = 2.35 dB mW/g

#38_GSM850_GPRS (2 Tx slots)_Bottom_0cm_Ch251

DUT: 2N2103-02

Communication System: GSM850; Frequency: 848.8 MHz;Duty Cycle: 1:4
Medium: MSL_850_121215 Medium parameters used: f = 849 MHz; σ = 0.976 mho/m; ε_r = 54.358; ρ = 1000 kg/m^3
Ambient Temperature：22.4 ℃； Liquid Temperature：21.4 ℃

DASY5 Configuration:
- Probe: ET3DV6 - SN1787; ConvF(6.08, 6.08, 6.08); Calibrated: 2012/5/29;
- Sensor-Surface: 4mm (Mechanical Surface Detection)
- Electronics: DAE3 Sn495; Calibrated: 2012/4/23
- Phantom: ELI v4.0; Type: QDOVA001BB; Serial: TP:1127
- Measurement SW: DASY52, Version 52.8 (3); SEMCAD X Version 14.6.5 (6469)

Configuration/Ch251/Area Scan (81x101x1): Measurement grid: dx=15mm, dy=15mm
Maximum value of SAR (interpolated) = 1.38 mW/g

Configuration/Ch251/Zoom Scan (5x5x7)/Cube 0: Measurement grid: dx=8mm, dy=8mm, dz=5mm
Reference Value = 3.036 V/m; Power Drift = 0.15 dB
Peak SAR (extrapolated) = 1.895 mW/g
SAR(1 g) = 1.18 mW/g; SAR(10 g) = 0.726 mW/g
Maximum value of SAR (measured) = 1.31 mW/g

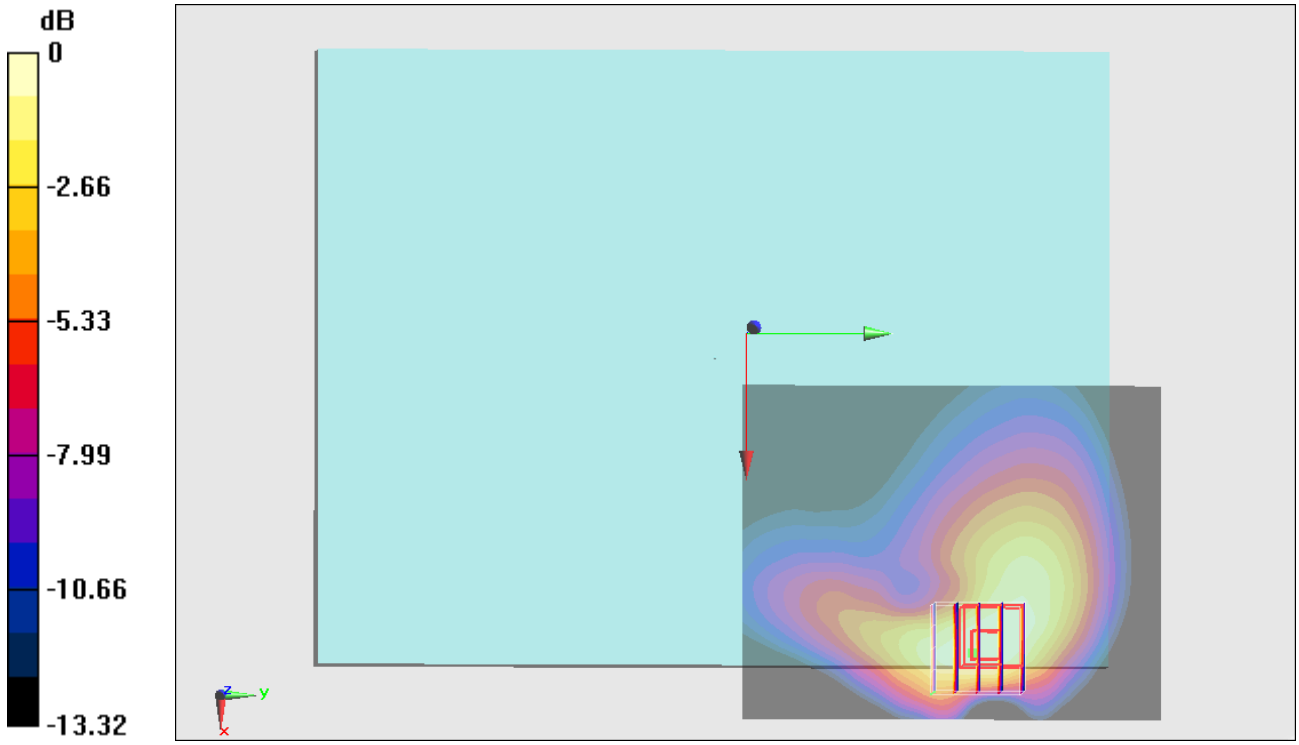

0 dB = 1.31 mW/g = 2.35 dB mW/g

#39_GSM850_GPRS (2 Tx slots)_Bottom Face_1cm_Ch128

DUT: 2N2103-02

Communication System: GSM850; Frequency: 824.2 MHz;Duty Cycle: 1:4
Medium: MSL_850_121215 Medium parameters used : f = 824.2 MHz; σ = 0.953 mho/m; ε_r = 54.624; ρ = 1000 kg/m^3
Ambient Temperature：22.4 ℃； Liquid Temperature：21.4 ℃

DASY5 Configuration:
- Probe: ET3DV6 - SN1787; ConvF(6.08, 6.08, 6.08); Calibrated: 2012/5/29;
- Sensor-Surface: 4mm (Mechanical Surface Detection)
- Electronics: DAE3 Sn495; Calibrated: 2012/4/23
- Phantom: ELI v4.0; Type: QDOVA001BB; Serial: TP:1127
- Measurement SW: DASY52, Version 52.8 (3); SEMCAD X Version 14.6.5 (6469)

Configuration/Ch128/Area Scan (81x91x1): Measurement grid: dx=15mm, dy=15mm
Maximum value of SAR (interpolated) = 1.15 mW/g

Configuration/Ch128/Zoom Scan (5x5x7)/Cube 0: Measurement grid: dx=8mm, dy=8mm, dz=5mm
Reference Value = 8.471 V/m; Power Drift = -0.10 dB
Peak SAR (extrapolated) = 1.449 mW/g
SAR(1 g) = 1.06 mW/g; SAR(10 g) = 0.726 mW/g
Maximum value of SAR (measured) = 1.14 mW/g

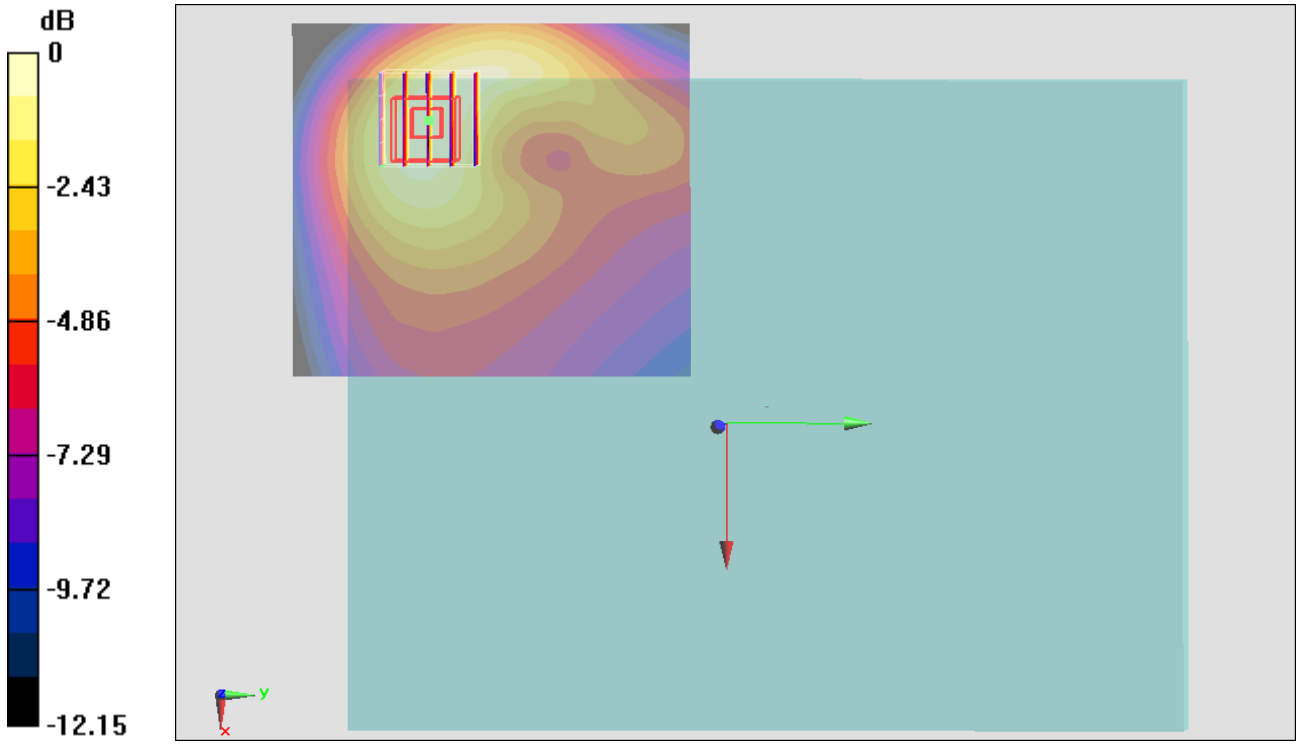

0 dB = 1.14 mW/g = 1.14 dB mW/g

#40_GSM850_GPRS (2 Tx slots)_Bottom Face_1cm_Ch189

DUT: 2N2103-02

Communication System: GSM850; Frequency: 836.4 MHz;Duty Cycle: 1:4
Medium: MSL_850_121215 Medium parameters used : f = 836.4 MHz; σ = 0.965 mho/m; ε_r = 54.478; ρ = 1000 kg/m^3
Ambient Temperature：22.4 ℃； Liquid Temperature：21.4 ℃

DASY5 Configuration:
- Probe: ET3DV6 - SN1787; ConvF(6.08, 6.08, 6.08); Calibrated: 2012/5/29;
- Sensor-Surface: 4mm (Mechanical Surface Detection)
- Electronics: DAE3 Sn495; Calibrated: 2012/4/23
- Phantom: ELI v4.0; Type: QDOVA001BB; Serial: TP:1127
- Measurement SW: DASY52, Version 52.8 (3); SEMCAD X Version 14.6.5 (6469)

Configuration/Ch189/Area Scan (81x91x1): Measurement grid: dx=15mm, dy=15mm
Maximum value of SAR (interpolated) = 1.17 mW/g

Configuration/Ch189/Zoom Scan (5x5x7)/Cube 0: Measurement grid: dx=8mm, dy=8mm, dz=5mm
Reference Value = 8.366 V/m; Power Drift = -0.10 dB
Peak SAR (extrapolated) = 1.579 mW/g
SAR(1 g) = 1.09 mW/g; SAR(10 g) = 0.732 mW/g
Maximum value of SAR (measured) = 1.15 mW/g

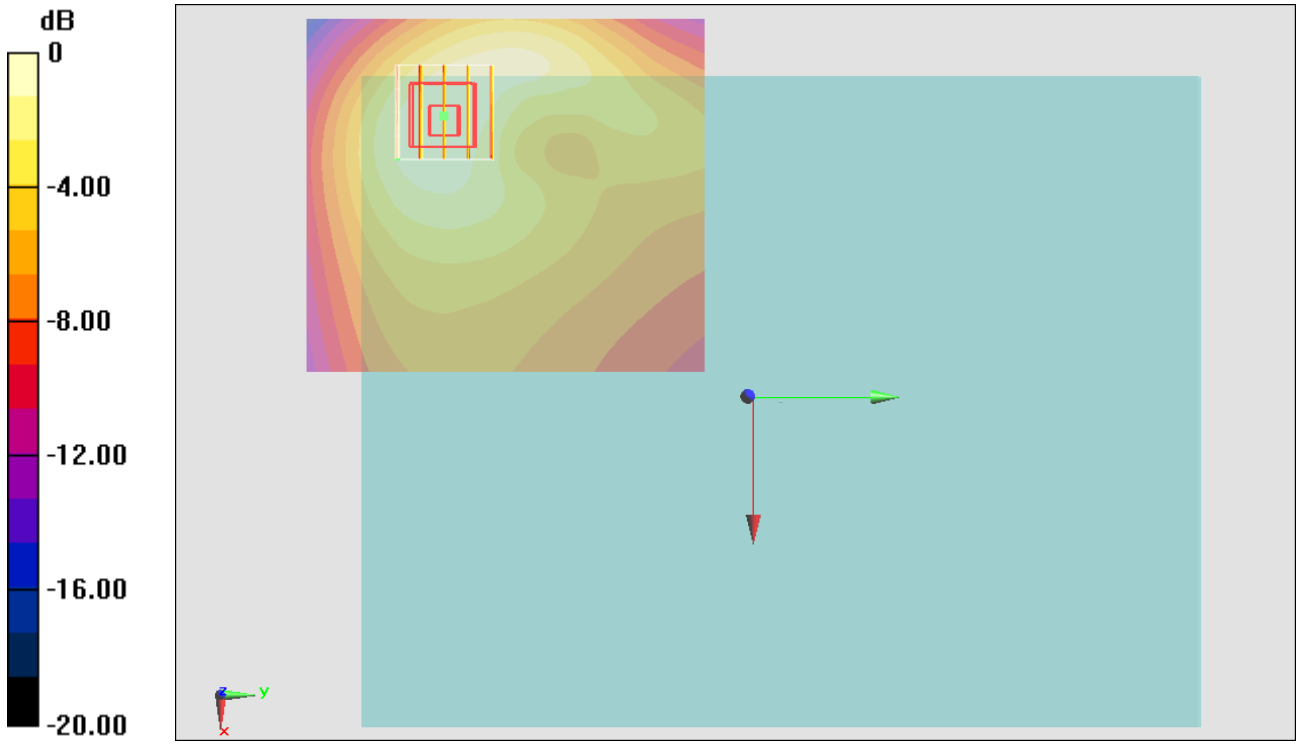

0 dB = 1.15 mW/g = 1.21 dB mW/g

#41_GSM850_GPRS (2 Tx slots)_Bottom Face_1cm_Ch251

DUT: 2N2103-02

Communication System: GSM850; Frequency: 848.8 MHz;Duty Cycle: 1:4
Medium: MSL_850_121215 Medium parameters used: f = 849 MHz; σ = 0.976 mho/m; ε_r = 54.358; ρ = 1000 kg/m^3
Ambient Temperature：22.4 ℃； Liquid Temperature：21.4 ℃

DASY5 Configuration:
- Probe: ET3DV6 - SN1787; ConvF(6.08, 6.08, 6.08); Calibrated: 2012/5/29;
- Sensor-Surface: 4mm (Mechanical Surface Detection)
- Electronics: DAE3 Sn495; Calibrated: 2012/4/23
- Phantom: ELI v4.0; Type: QDOVA001BB; Serial: TP:1127
- Measurement SW: DASY52, Version 52.8 (3); SEMCAD X Version 14.6.5 (6469)

Configuration/Ch251/Area Scan (81x91x1): Measurement grid: dx=15mm, dy=15mm
Maximum value of SAR (interpolated) = 1.09 mW/g

Configuration/Ch251/Zoom Scan (5x5x7)/Cube 0: Measurement grid: dx=8mm, dy=8mm, dz=5mm
Reference Value = 7.950 V/m; Power Drift = -0.13 dB
Peak SAR (extrapolated) = 1.388 mW/g
SAR(1 g) = 1 mW/g; SAR(10 g) = 0.684 mW/g
Maximum value of SAR (measured) = 1.08 mW/g

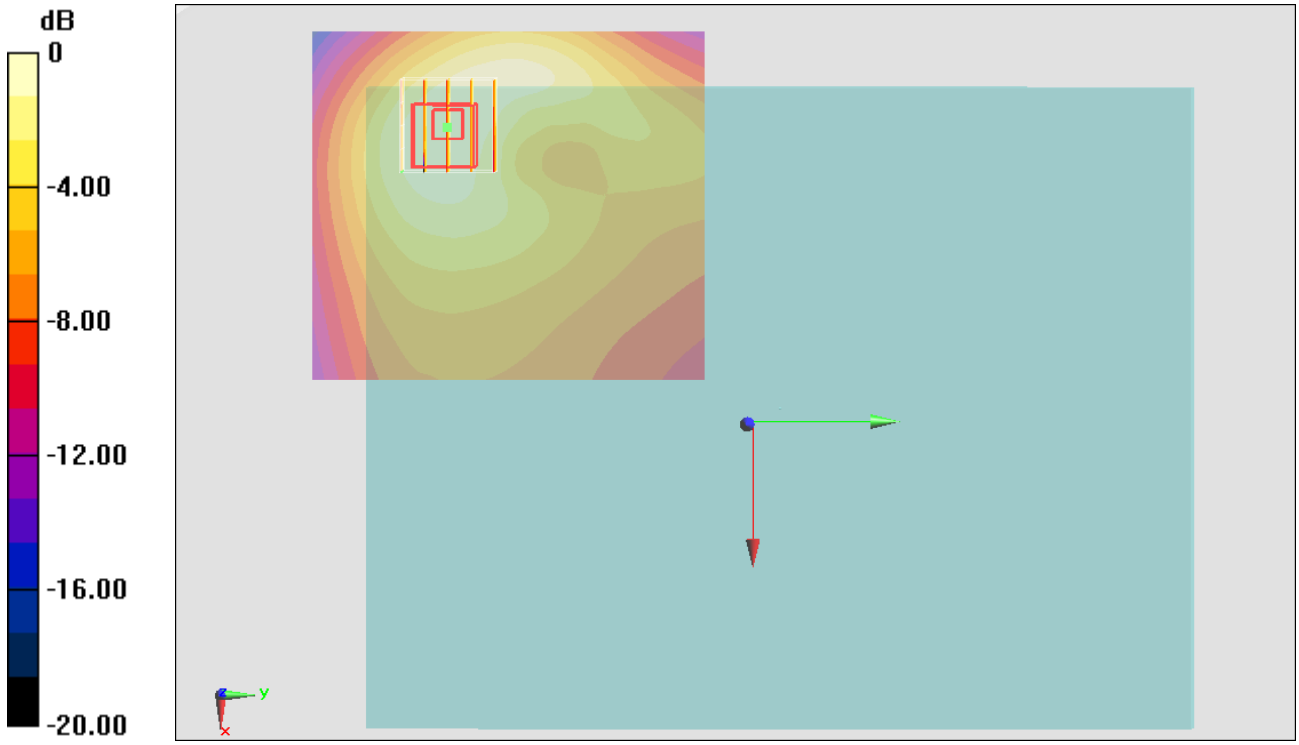

0 dB = 1.08 mW/g = 0.67 dB mW/g

#01_GSM1900_GPRS(2 TX Slots)_Bottom Face_0cm_Ch512

DUT: 2N2103-02

Communication System: PCS; Frequency: 1850.2 MHz;Duty Cycle: 1:4
Medium: MSL_1900_121214 Medium parameters used : f = 1850.2 MHz; σ = 1.474 mho/m; ε_r = 54.3; ρ = 1000 kg/m^3
Ambient Temperature：22.5 ℃； Liquid Temperature：21.5 ℃

DASY5 Configuration:
- Probe: ET3DV6 - SN1787; ConvF(4.58, 4.58, 4.58); Calibrated: 2012/5/29;
- Sensor-Surface: 4mm (Mechanical Surface Detection)
- Electronics: DAE3 Sn495; Calibrated: 2012/4/23
- Phantom: ELI v5.0 Left; Type: QDOVA002AA; Serial: TP:1131
- Measurement SW: DASY52, Version 52.8 (3); SEMCAD X Version 14.6.5 (6469)

Configuration/Ch512/Area Scan (101x91x1): Measurement grid: dx=15mm, dy=15mm
Maximum value of SAR (interpolated) = 0.694 mW/g

Configuration/Ch512/Zoom Scan (5x5x7)/Cube 0: Measurement grid: dx=8mm, dy=8mm, dz=5mm
Reference Value = 22.764 V/m; Power Drift = 0.04 dB
Peak SAR (extrapolated) = 1.012 mW/g
SAR(1 g) = 0.599 mW/g; SAR(10 g) = 0.346 mW/g
Maximum value of SAR (measured) = 0.646 mW/g

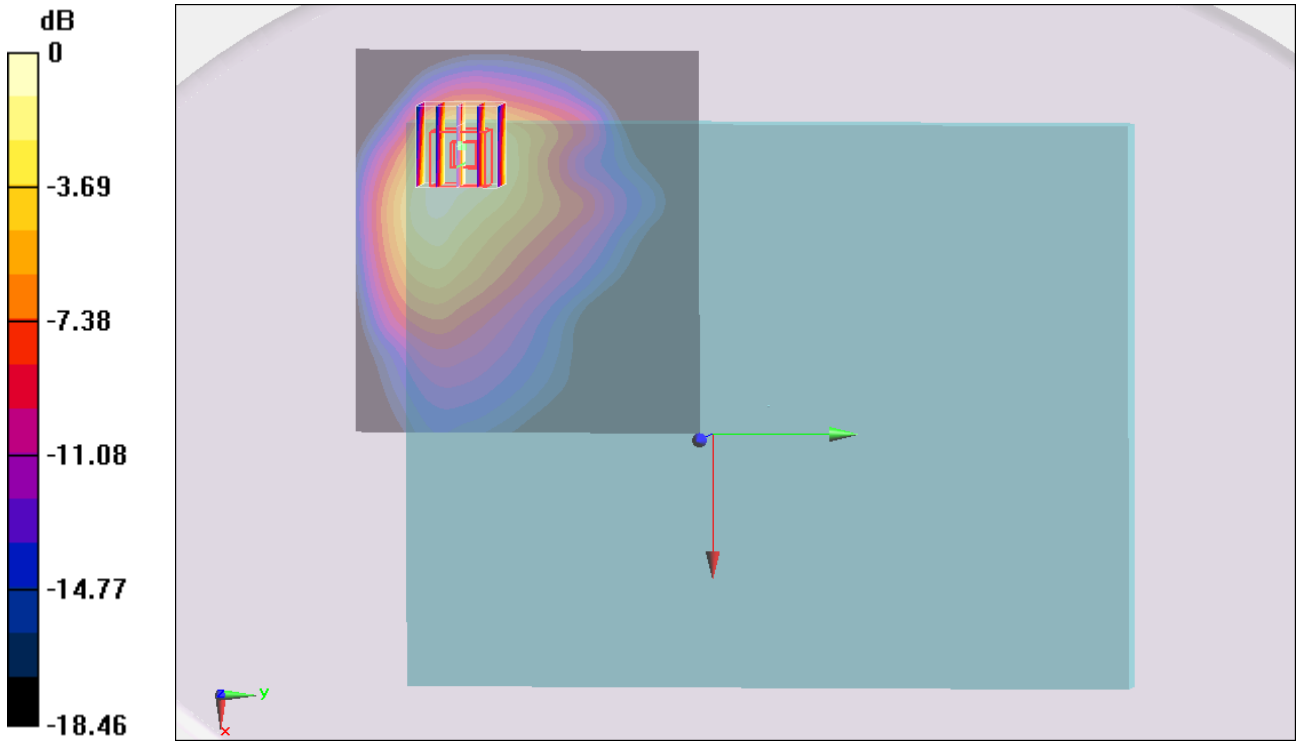

0 dB = 0.646 mW/g = -3.80 dB mW/g

#02_GSM1900_GPRS(2 TX Slots)_Edge 3_0cm_Ch512

DUT: 2N2103-02

Communication System: PCS; Frequency: 1850.2 MHz;Duty Cycle: 1:4
Medium: MSL_1900_121214 Medium parameters used : f = 1850.2 MHz; σ = 1.474 mho/m; ε_r = 54.3; ρ = 1000 kg/m^3
Ambient Temperature：22.5 ℃； Liquid Temperature：21.5 ℃

DASY5 Configuration:
- Probe: ET3DV6 - SN1787; ConvF(4.58, 4.58, 4.58); Calibrated: 2012/5/29;
- Sensor-Surface: 4mm (Mechanical Surface Detection)
- Electronics: DAE3 Sn495; Calibrated: 2012/4/23
- Phantom: ELI v5.0 Left; Type: QDOVA002AA; Serial: TP:1131
- Measurement SW: DASY52, Version 52.8 (3); SEMCAD X Version 14.6.5 (6469)

Configuration/Ch512/Area Scan (41x201x1): Measurement grid: dx=15mm, dy=15mm
Maximum value of SAR (interpolated) = 0.667 mW/g

Configuration/Ch512/Zoom Scan (5x5x7)/Cube 0: Measurement grid: dx=8mm, dy=8mm, dz=5mm
Reference Value = 25.254 V/m; Power Drift = -0.03 dB
Peak SAR (extrapolated) = 1.551 mW/g
SAR(1 g) = 0.744 mW/g; SAR(10 g) = 0.356 mW/g
Maximum value of SAR (measured) = 0.951 mW/g

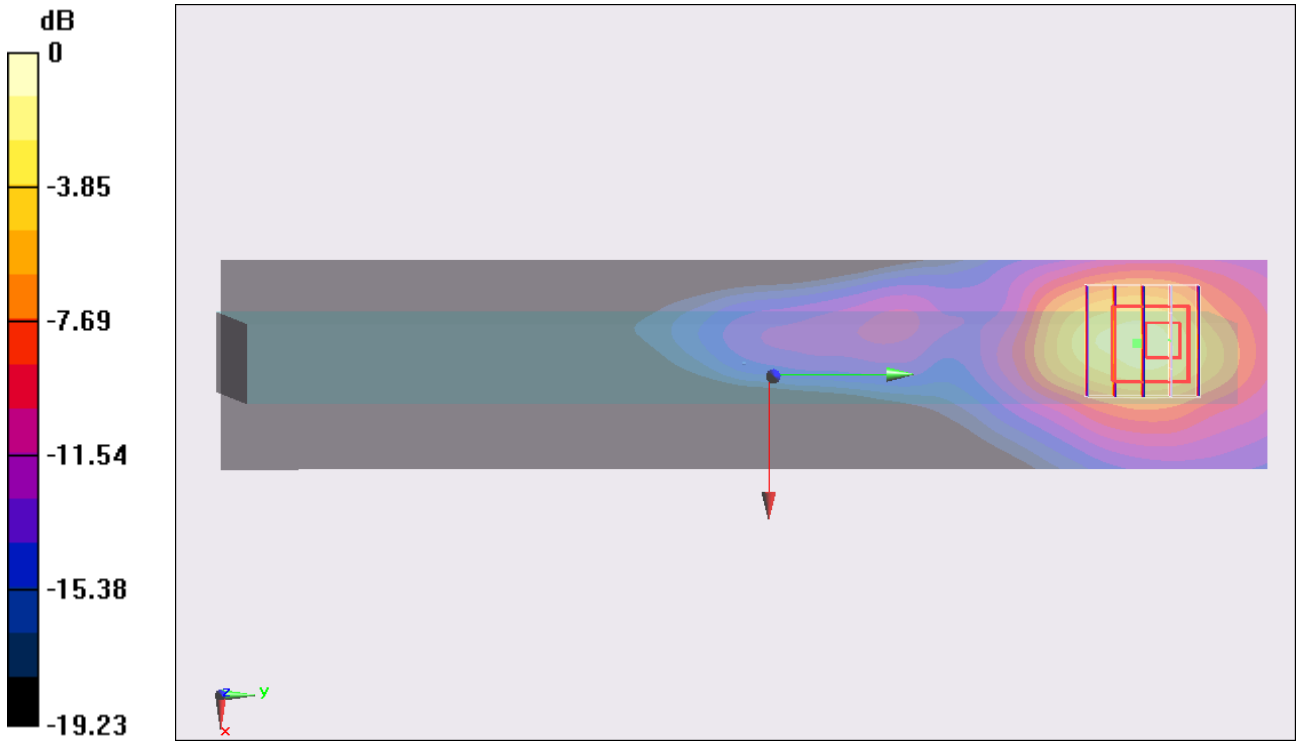

0 dB = 0.951 mW/g = -0.44 dB mW/g

#08_GSM1900_GPRS(2 TX Slots)_Edge 3_0cm_Ch661

DUT: 2N2103-02

Communication System: PCS; Frequency: 1880 MHz;Duty Cycle: 1:4
Medium: MSL_1900_121214 Medium parameters used: f = 1880 MHz; σ = 1.51 mho/m; ε_r = 54.235; ρ = 1000 kg/m^3
Ambient Temperature：22.5 ℃； Liquid Temperature：21.5 ℃

DASY5 Configuration:
- Probe: ET3DV6 - SN1787; ConvF(4.58, 4.58, 4.58); Calibrated: 2012/5/29;
- Sensor-Surface: 4mm (Mechanical Surface Detection)
- Electronics: DAE3 Sn495; Calibrated: 2012/4/23
- Phantom: ELI v5.0 Left; Type: QDOVA002AA; Serial: TP:1131
- Measurement SW: DASY52, Version 52.8 (3); SEMCAD X Version 14.6.5 (6469)

Configuration/Ch661/Area Scan (41x201x1): Measurement grid: dx=15mm, dy=15mm
Maximum value of SAR (interpolated) = 0.686 mW/g

Configuration/Ch661/Zoom Scan (5x5x7)/Cube 0: Measurement grid: dx=8mm, dy=8mm, dz=5mm
Reference Value = 25.056 V/m; Power Drift = -0.02 dB
Peak SAR (extrapolated) = 1.561 mW/g
SAR(1 g) = 0.756 mW/g; SAR(10 g) = 0.362 mW/g
Maximum value of SAR (measured) = 0.964 mW/g

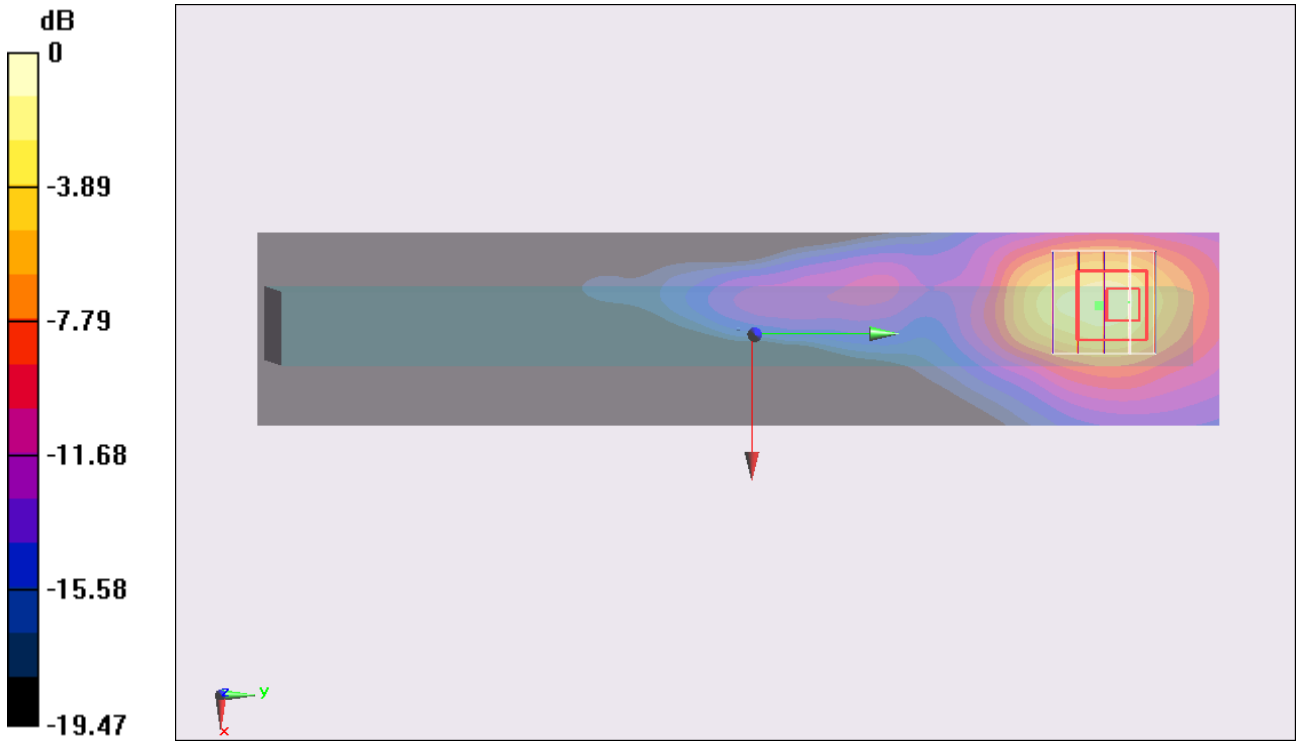

0 dB = 0.964 mW/g = -0.32 dB mW/g

#09_GSM1900_GPRS(2 TX Slots)_Edge 3_0cm_Ch810

DUT: 2N2103-02

Communication System: PCS; Frequency: 1909.8 MHz;Duty Cycle: 1:4
Medium: MSL_1900_121214 Medium parameters used: f = 1910 MHz; σ = 1.543 mho/m; ε_r = 54.108; ρ = 1000 kg/m^3
Ambient Temperature：22.5 ℃； Liquid Temperature：21.5 ℃

DASY5 Configuration:
- Probe: ET3DV6 - SN1787; ConvF(4.58, 4.58, 4.58); Calibrated: 2012/5/29;
- Sensor-Surface: 4mm (Mechanical Surface Detection)
- Electronics: DAE3 Sn495; Calibrated: 2012/4/23
- Phantom: ELI v5.0 Left; Type: QDOVA002AA; Serial: TP:1131
- Measurement SW: DASY52, Version 52.8 (3); SEMCAD X Version 14.6.5 (6469)

Configuration/Ch810/Area Scan (41x201x1): Measurement grid: dx=15mm, dy=15mm
Maximum value of SAR (interpolated) = 0.727 mW/g

Configuration/Ch810/Zoom Scan (5x5x7)/Cube 0: Measurement grid: dx=8mm, dy=8mm, dz=5mm
Reference Value = 25.520 V/m; Power Drift = -0.04 dB
Peak SAR (extrapolated) = 1.649 mW/g
SAR(1 g) = 0.787 mW/g; SAR(10 g) = 0.370 mW/g
Maximum value of SAR (measured) = 0.960 mW/g

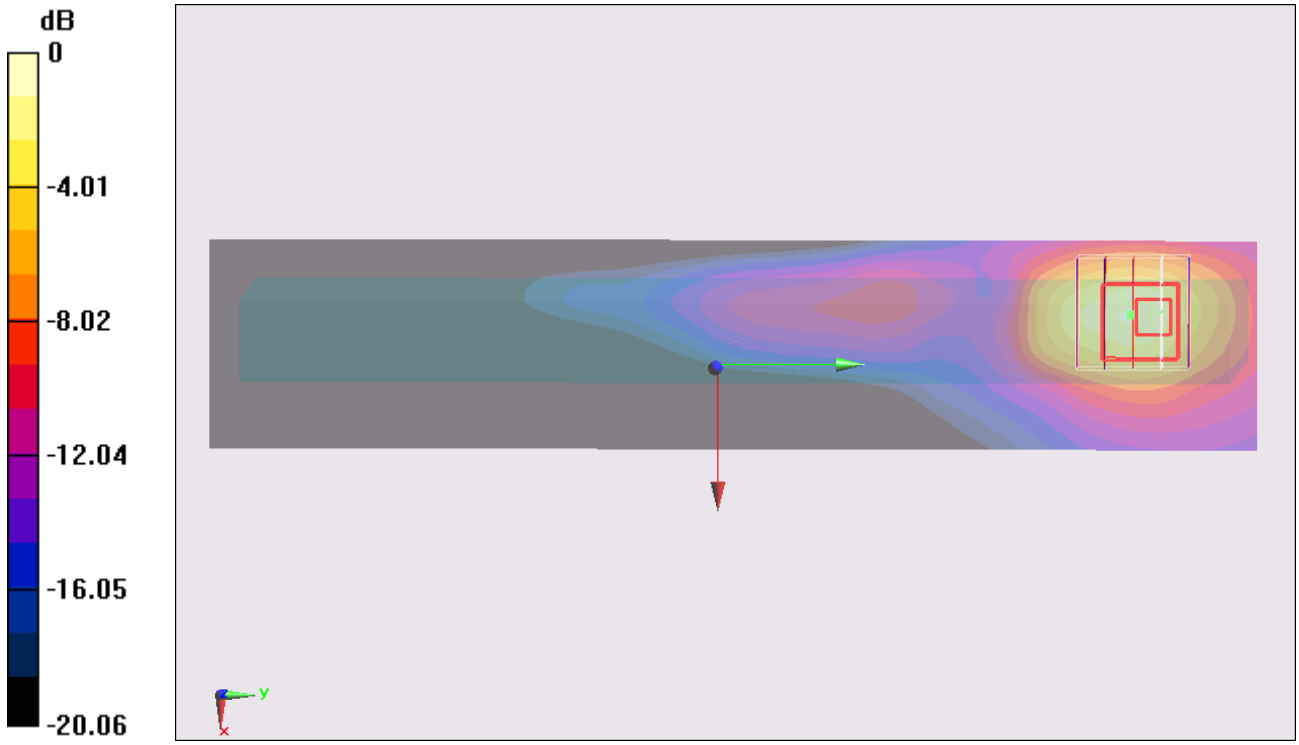

0 dB = 0.960 mW/g = -0.35 dB mW/g

#03_GSM1900_GPRS(2 TX Slots)_Edge 4_0cm_Ch512

DUT: 2N2103-02

Communication System: PCS; Frequency: 1850.2 MHz;Duty Cycle: 1:4
Medium: MSL_1900_121214 Medium parameters used: f = 1850.2 MHz; σ = 1.474 mho/m; ε_r = 54.3; ρ = 1000 kg/m^3
Ambient Temperature：22.5 ℃； Liquid Temperature：21.5 ℃

DASY5 Configuration:
- Probe: ET3DV6 - SN1787; ConvF(4.58, 4.58, 4.58); Calibrated: 2012/5/29;
- Sensor-Surface: 4mm (Mechanical Surface Detection)
- Electronics: DAE3 Sn495; Calibrated: 2012/4/23
- Phantom: ELI v5.0 Left; Type: QDOVA002AA; Serial: TP:1131
- Measurement SW: DASY52, Version 52.8 (3); SEMCAD X Version 14.6.5 (6469)

Configuration/Ch512/Area Scan (41x181x1): Measurement grid: dx=15mm, dy=15mm
Maximum value of SAR (interpolated) = 1.16 mW/g

Configuration/Ch512/Zoom Scan (5x5x7)/Cube 0: Measurement grid: dx=8mm, dy=8mm, dz=5mm
Reference Value = 30.572 V/m; Power Drift = 0.00 dB
Peak SAR (extrapolated) = 2.054 mW/g
SAR(1 g) = 1.04 mW/g; SAR(10 g) = 0.571 mW/g
Maximum value of SAR (measured) = 1.17 mW/g

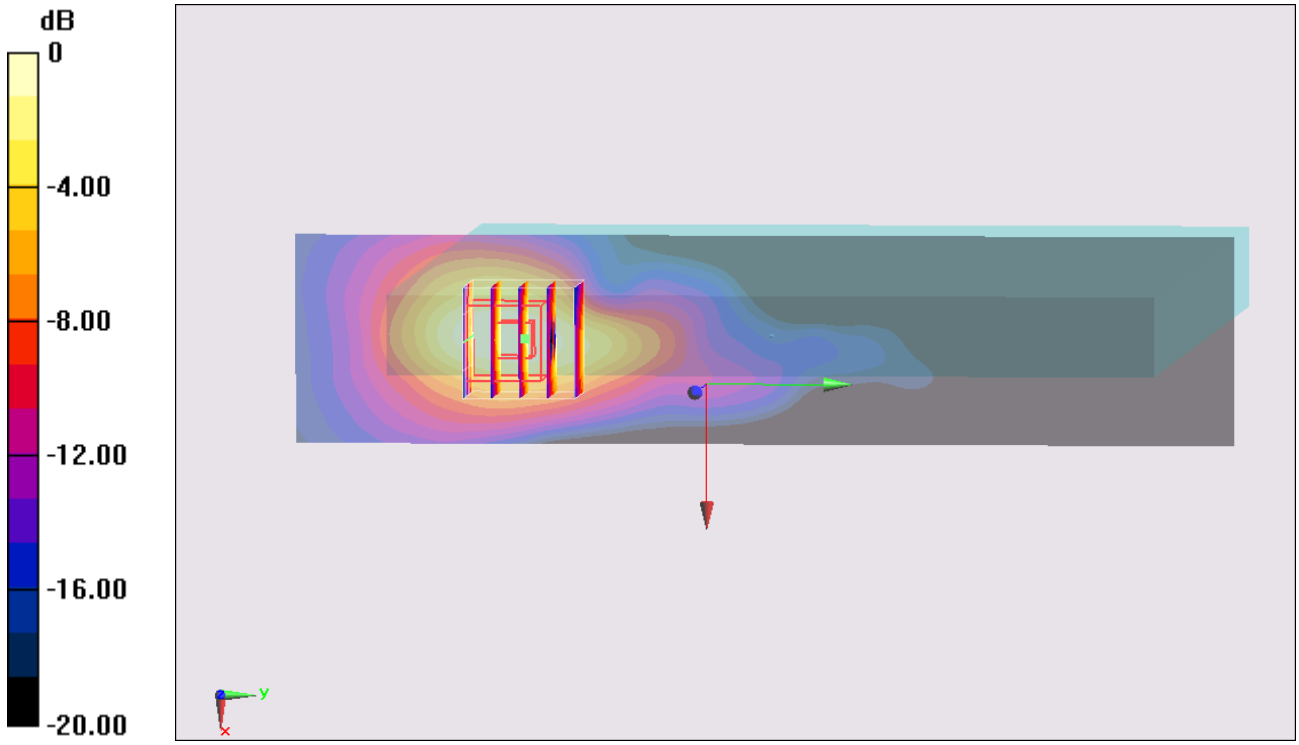

0 dB = 1.17 mW/g = 1.36 dB mW/g

#06_GSM1900_GPRS(2 TX Slots)_Edge 4_0cm_Ch661

DUT: 2N2103-02

Communication System: PCS; Frequency: 1880 MHz;Duty Cycle: 1:4
Medium: MSL_1900_121214 Medium parameters used: f = 1880 MHz; σ = 1.51 mho/m; ε_r = 54.235; ρ = 1000 kg/m^3
Ambient Temperature：22.5 ℃； Liquid Temperature：21.5 ℃

DASY5 Configuration:
- Probe: ET3DV6 - SN1787; ConvF(4.58, 4.58, 4.58); Calibrated: 2012/5/29;
- Sensor-Surface: 4mm (Mechanical Surface Detection)
- Electronics: DAE3 Sn495; Calibrated: 2012/4/23
- Phantom: ELI v5.0 Left; Type: QDOVA002AA; Serial: TP:1131
- Measurement SW: DASY52, Version 52.8 (3); SEMCAD X Version 14.6.5 (6469)

Configuration/Ch661/Area Scan (41x181x1): Measurement grid: dx=15mm, dy=15mm
Maximum value of SAR (interpolated) = 1.23 mW/g

Configuration/Ch661/Zoom Scan (5x5x7)/Cube 0: Measurement grid: dx=8mm, dy=8mm, dz=5mm
Reference Value = 31.004 V/m; Power Drift = -0.08 dB
Peak SAR (extrapolated) = 1.637 mW/g
SAR(1 g) = 1.08 mW/g; SAR(10 g) = 0.585 mW/g
Maximum value of SAR (measured) = 1.15 mW/g

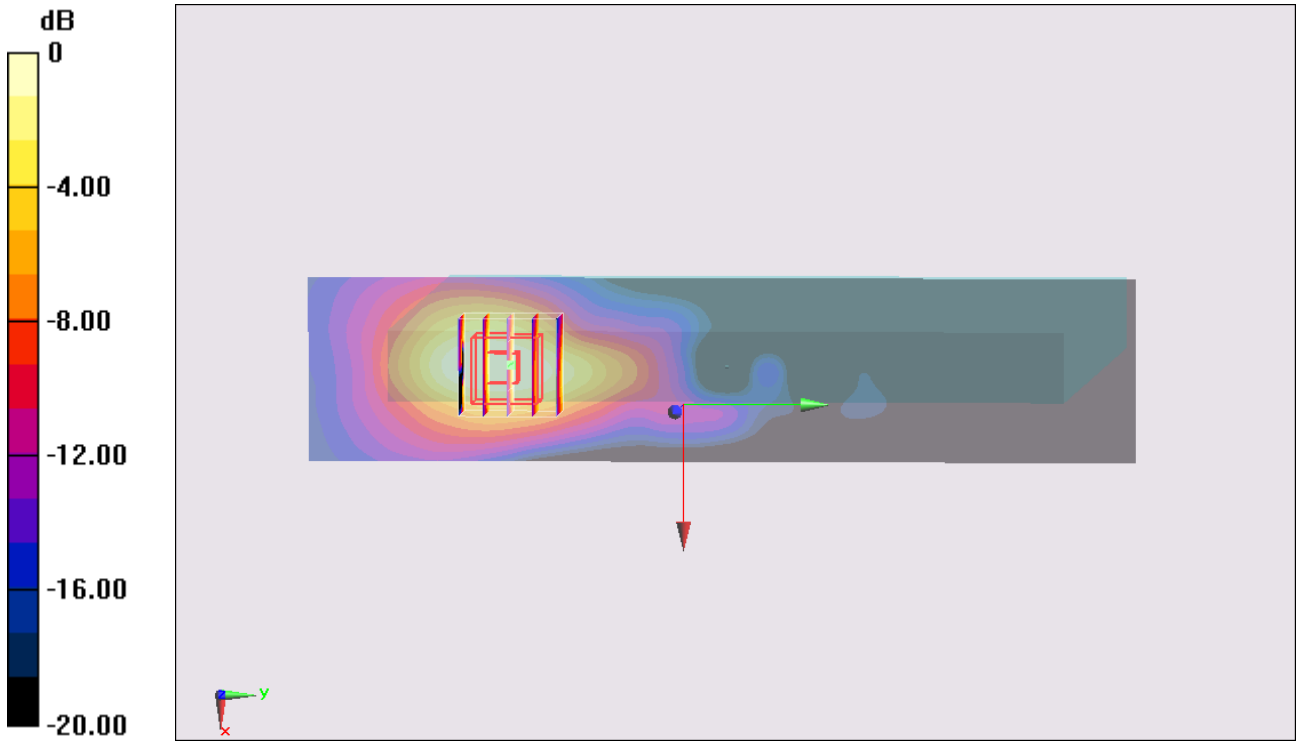

0 dB = 1.15 mW/g = 1.21 dB mW/g

#07_GSM1900_GPRS(2 TX Slots)_Edge 4_0cm_Ch810

DUT: 2N2103-02

Communication System: PCS; Frequency: 1909.8 MHz;Duty Cycle: 1:4
Medium: MSL_1900_121214 Medium parameters used: f = 1910 MHz; σ = 1.543 mho/m; ε_r = 54.108; ρ = 1000 kg/m^3
Ambient Temperature：22.5 ℃； Liquid Temperature：21.5 ℃

DASY5 Configuration:
- Probe: ET3DV6 - SN1787; ConvF(4.58, 4.58, 4.58); Calibrated: 2012/5/29;
- Sensor-Surface: 4mm (Mechanical Surface Detection)
- Electronics: DAE3 Sn495; Calibrated: 2012/4/23
- Phantom: ELI v5.0 Left; Type: QDOVA002AA; Serial: TP:1131
- Measurement SW: DASY52, Version 52.8 (3); SEMCAD X Version 14.6.5 (6469)

Configuration/Ch810/Area Scan (41x181x1): Measurement grid: dx=15mm, dy=15mm
Maximum value of SAR (interpolated) = 1.33 mW/g

Configuration/Ch810/Zoom Scan (5x5x7)/Cube 0: Measurement grid: dx=8mm, dy=8mm, dz=5mm
Reference Value = 31.849 V/m; Power Drift = -0.10 dB
Peak SAR (extrapolated) = 2.586 mW/g
SAR(1 g) = 1.28 mW/g; SAR(10 g) = 0.654 mW/g
Maximum value of SAR (measured) = 1.27 mW/g

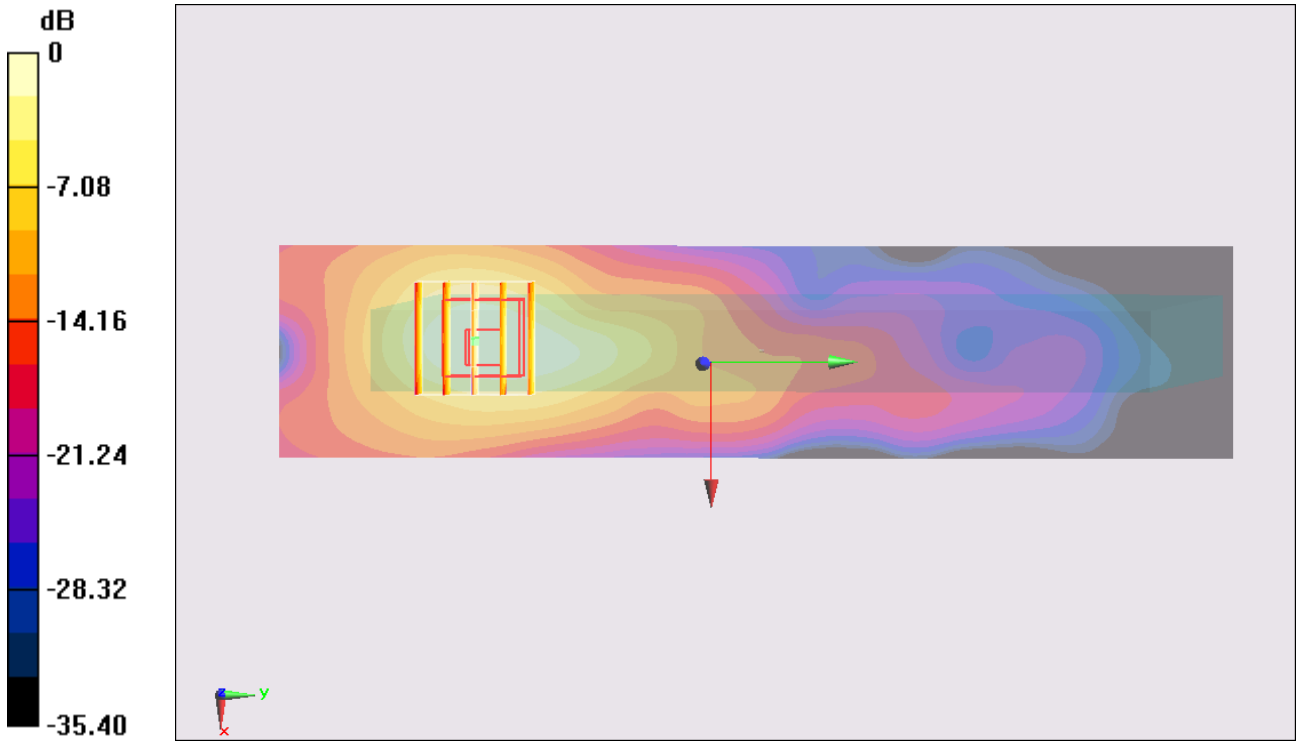

0 dB = 1.27 mW/g = 2.08 dB mW/g

#07_GSM1900_GPRS(2 TX Slots)_Edge 4_0cm_Ch810_2D

DUT: 2N2103-02

Communication System: PCS; Frequency: 1909.8 MHz;Duty Cycle: 1:4
Medium: MSL_1900_121214 Medium parameters used: f = 1910 MHz; σ = 1.543 mho/m; ε_r = 54.108; ρ = 1000 kg/m^3
Ambient Temperature：22.5 ℃; Liquid Temperature：21.5 ℃

DASY5 Configuration:
- Probe: ET3DV6 - SN1787; ConvF(4.58, 4.58, 4.58); Calibrated: 2012/5/29;
- Sensor-Surface: 4mm (Mechanical Surface Detection)
- Electronics: DAE3 Sn495; Calibrated: 2012/4/23
- Phantom: ELI v5.0 Left; Type: QDOVA002AA; Serial: TP:1131
- Measurement SW: DASY52, Version 52.8 (3); SEMCAD X Version 14.6.5 (6469)

Configuration/Ch810/Area Scan (41x181x1): Measurement grid: dx=15mm, dy=15mm
Maximum value of SAR (interpolated) = 1.33 mW/g

Configuration/Ch810/Zoom Scan (5x5x7)/Cube 0: Measurement grid: dx=8mm, dy=8mm, dz=5mm
Reference Value = 31.849 V/m; Power Drift = -0.10 dB
Peak SAR (extrapolated) = 2.586 mW/g
SAR(1 g) = 1.28 mW/g; SAR(10 g) = 0.654 mW/g
Maximum value of SAR (measured) = 1.27 mW/g

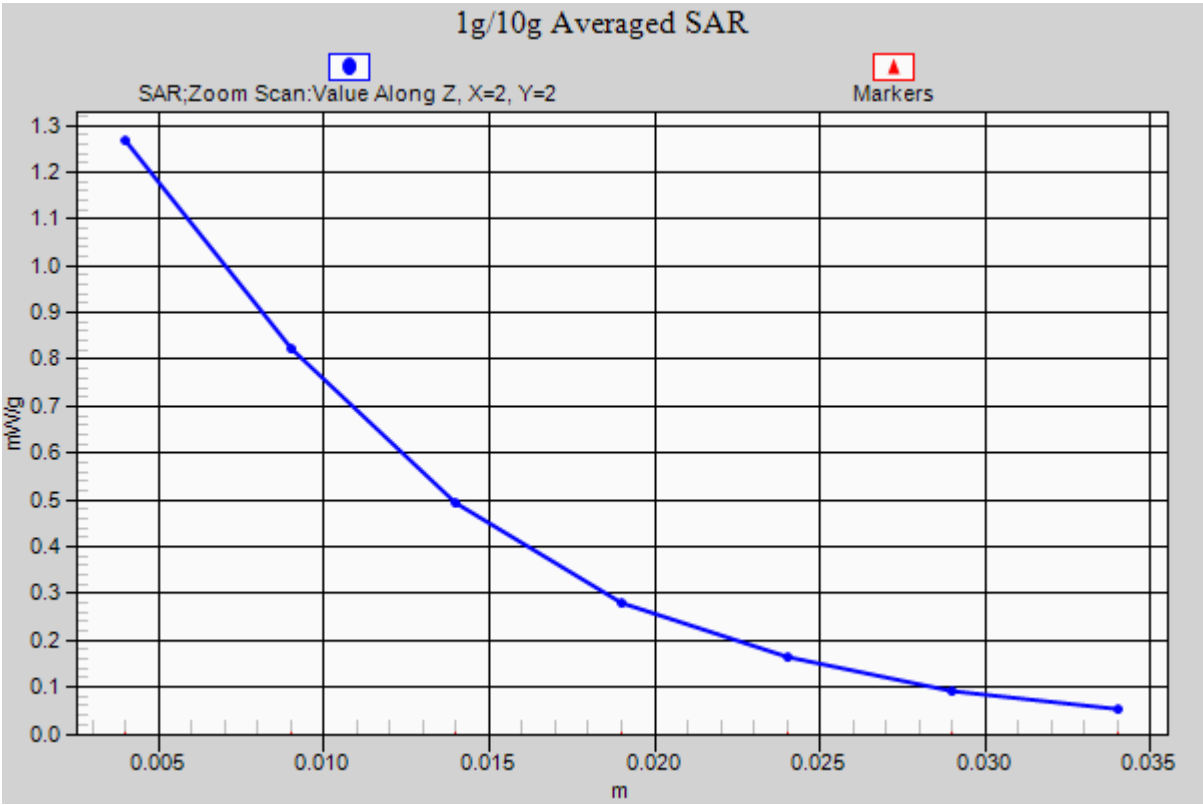

#60_GSM1900_GPRS(2 TX Slots)_Edge 4_0cm_Ch810_Repeat

DUT: 2N2103-02

Communication System: PCS; Frequency: 1909.8 MHz;Duty Cycle: 1:4
Medium: MSL_1900_121214 Medium parameters used: f = 1910 MHz; σ = 1.543 mho/m; ε_r = 54.108; ρ = 1000 kg/m^3
Ambient Temperature：22.5 ℃； Liquid Temperature：21.5 ℃

DASY5 Configuration:
- Probe: ET3DV6 - SN1787; ConvF(4.58, 4.58, 4.58); Calibrated: 2012/5/29;
- Sensor-Surface: 4mm (Mechanical Surface Detection)
- Electronics: DAE3 Sn495; Calibrated: 2012/4/23
- Phantom: ELI v5.0 Left; Type: QDOVA002AA; Serial: TP:1131
- Measurement SW: DASY52, Version 52.8 (3); SEMCAD X Version 14.6.5 (6469)

Configuration/Ch810/Area Scan (41x181x1): Measurement grid: dx=15mm, dy=15mm
Maximum value of SAR (interpolated) = 1.52 mW/g

Configuration/Ch810/Zoom Scan (5x5x7)/Cube 0: Measurement grid: dx=8mm, dy=8mm, dz=5mm
Reference Value = 31.198 V/m; Power Drift = -0.12 dB
Peak SAR (extrapolated) = 2.038 mW/g
SAR(1 g) = 1.23 mW/g; SAR(10 g) = 0.680 mW/g
Maximum value of SAR (measured) = 1.37 mW/g

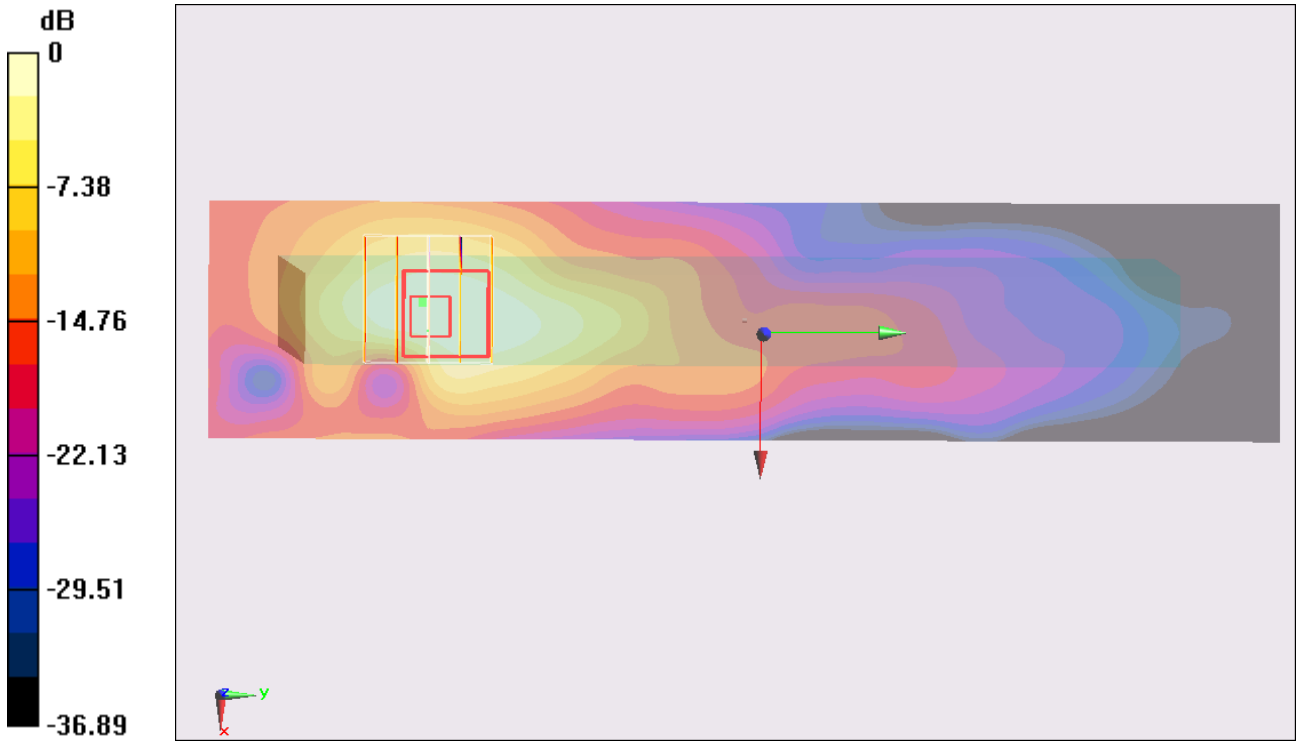

0 dB = 1.37 mW/g = 2.73 dB mW/g

#04_GSM1900_GPRS(2 TX Slots)_Bottom_0cm_Ch512

DUT: 2N2103-02

Communication System: PCS; Frequency: 1850.2 MHz;Duty Cycle: 1:4
Medium: MSL_1900_121214 Medium parameters used: f = 1850.2 MHz; σ = 1.474 mho/m; ε_r = 54.3; ρ = 1000 kg/m^3
Ambient Temperature：22.5 ℃； Liquid Temperature：21.5 ℃

DASY5 Configuration:
- Probe: ET3DV6 - SN1787; ConvF(4.58, 4.58, 4.58); Calibrated: 2012/5/29;
- Sensor-Surface: 4mm (Mechanical Surface Detection)
- Electronics: DAE3 Sn495; Calibrated: 2012/4/23
- Phantom: ELI v5.0 Left; Type: QDOVA002AA; Serial: TP:1131
- Measurement SW: DASY52, Version 52.8 (3); SEMCAD X Version 14.6.5 (6469)

Configuration/Ch512/Area Scan (91x91x1): Measurement grid: dx=15mm, dy=15mm
Maximum value of SAR (interpolated) = 0.727 mW/g

Configuration/Ch512/Zoom Scan (5x5x7)/Cube 0: Measurement grid: dx=8mm, dy=8mm, dz=5mm
Reference Value = 24.016 V/m; Power Drift = -0.02 dB
Peak SAR (extrapolated) = 1.084 mW/g
SAR(1 g) = 0.650 mW/g; SAR(10 g) = 0.373 mW/g
Maximum value of SAR (measured) = 0.708 mW/g

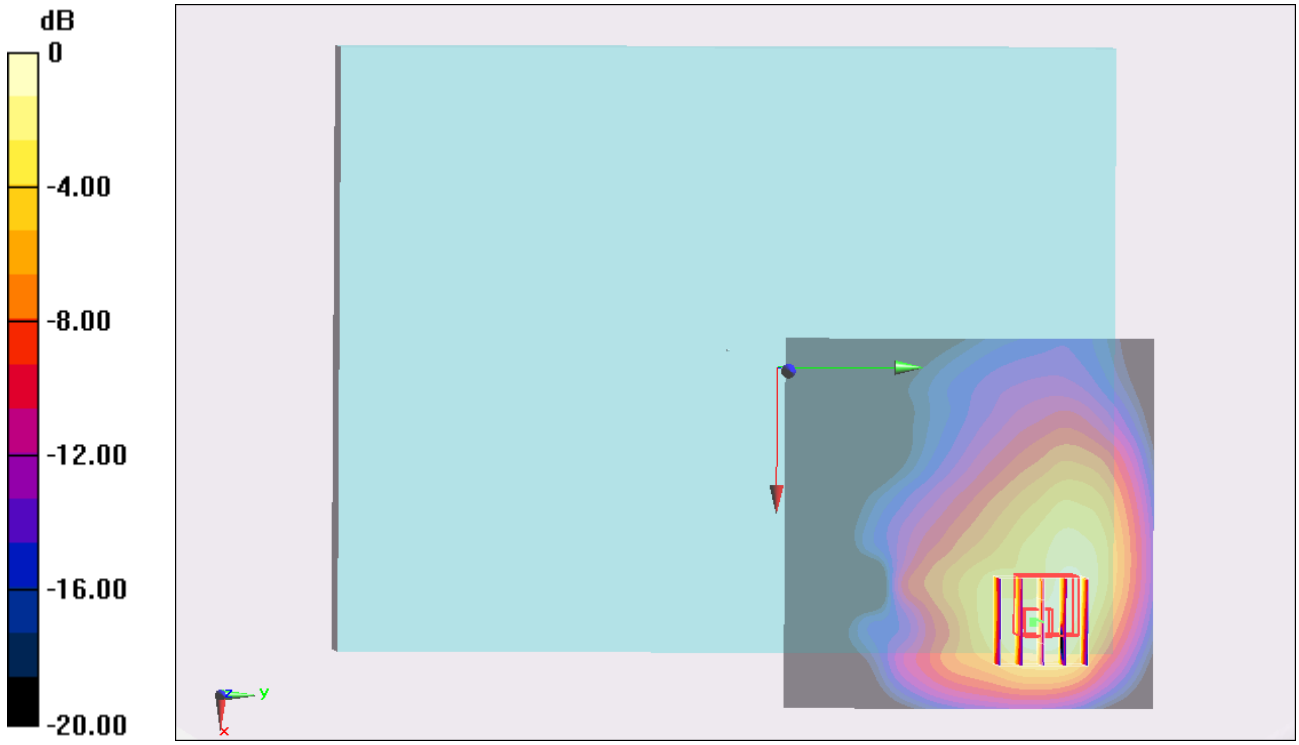

0 dB = 0.708 mW/g = -3.00 dB mW/g

#05_GSM1900_GPRS(2 TX Slots)_Bottom Face_1cm_Ch512

DUT: 2N2103-02

Communication System: PCS; Frequency: 1850.2 MHz;Duty Cycle: 1:4
Medium: MSL_1900_121214 Medium parameters used : f = 1850.2 MHz; σ = 1.474 mho/m; ε_r = 54.3; ρ = 1000 kg/m^3
Ambient Temperature：22.5 ℃； Liquid Temperature：21.5 ℃

DASY5 Configuration:
- Probe: ET3DV6 - SN1787; ConvF(4.58, 4.58, 4.58); Calibrated: 2012/5/29;
- Sensor-Surface: 4mm (Mechanical Surface Detection)
- Electronics: DAE3 Sn495; Calibrated: 2012/4/23
- Phantom: ELI v5.0 Left; Type: QDOVA002AA; Serial: TP:1131
- Measurement SW: DASY52, Version 52.8 (3); SEMCAD X Version 14.6.5 (6469)

Configuration/Ch512/Area Scan (101x91x1): Measurement grid: dx=15mm, dy=15mm
Maximum value of SAR (interpolated) = 0.416 mW/g

Configuration/Ch512/Zoom Scan (5x5x7)/Cube 0: Measurement grid: dx=8mm, dy=8mm, dz=5mm
Reference Value = 18.227 V/m; Power Drift = 0.154 dB
Peak SAR (extrapolated) = 0.599 mW/g
SAR(1 g) = 0.428 mW/g; SAR(10 g) = 0.282 mW/g
Maximum value of SAR (measured) = 0.468 mW/g

Configuration/Ch512/Zoom Scan (5x5x7)/Cube 1: Measurement grid: dx=8mm, dy=8mm, dz=5mm
Reference Value = 18.227 V/m; Power Drift = 0.154 dB
Peak SAR (extrapolated) = 0.593 mW/g
SAR(1 g) = 0.390 mW/g; SAR(10 g) = 0.243 mW/g
Maximum value of SAR (measured) = 0.421 mW/g

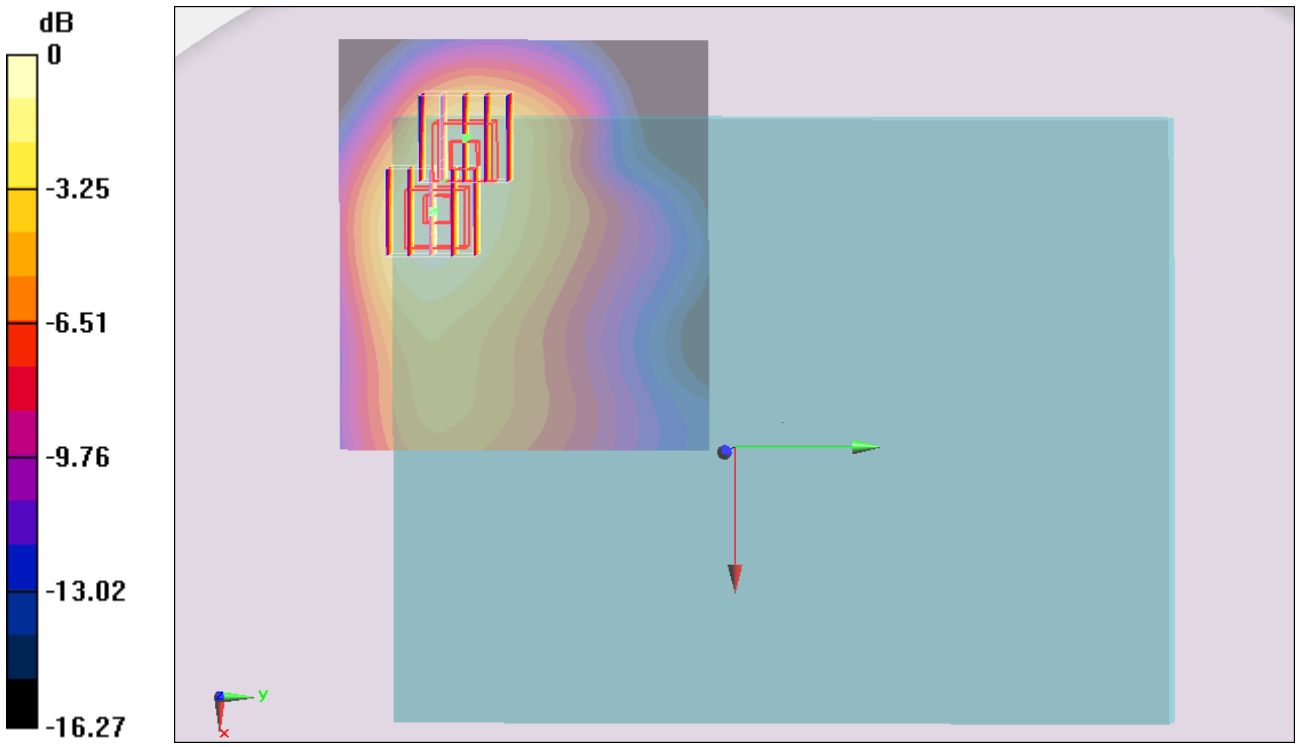

0 dB = 0.421 mW/g = -7.51 dB mW/g

#42_WCDMA V_RMC12.2K_Bottom Face_0cm_Ch4233

DUT: 2N2103-02

Communication System: WCDMA; Frequency: 846.6 MHz;Duty Cycle: 1:1
Medium: MSL_850_121215 Medium parameters used: f = 847 MHz; σ = 0.975 mho/m; ε_r = 54.38; ρ = 1000 kg/m^3
Ambient Temperature：22.4 ℃； Liquid Temperature：21.4 ℃

DASY5 Configuration:
- Probe: ET3DV6 - SN1787; ConvF(6.08, 6.08, 6.08); Calibrated: 2012/5/29;
- Sensor-Surface: 4mm (Mechanical Surface Detection)
- Electronics: DAE3 Sn495; Calibrated: 2012/4/23
- Phantom: ELI v4.0; Type: QDOVA001BB; Serial: TP:1127
- Measurement SW: DASY52, Version 52.8 (3); SEMCAD X Version 14.6.5 (6469)

Configuration/Ch4233/Area Scan (81x91x1): Measurement grid: dx=15mm, dy=15mm
Maximum value of SAR (interpolated) = 1.05 mW/g

Configuration/Ch4233/Zoom Scan (5x5x7)/Cube 0: Measurement grid: dx=8mm, dy=8mm, dz=5mm
Reference Value = 33.925 V/m; Power Drift = 0.01 dB
Peak SAR (extrapolated) = 1.532 mW/g
SAR(1 g) = 0.949 mW/g; SAR(10 g) = 0.571 mW/g
Maximum value of SAR (measured) = 1.03 mW/g

Configuration/Ch4233/Zoom Scan (5x5x7)/Cube 1: Measurement grid: dx=8mm, dy=8mm, dz=5mm
Reference Value = 33.925 V/m; Power Drift = 0.01 dB
Peak SAR (extrapolated) = 1.487 mW/g
SAR(1 g) = 0.942 mW/g; SAR(10 g) = 0.588 mW/g
Maximum value of SAR (measured) = 1.03 mW/g

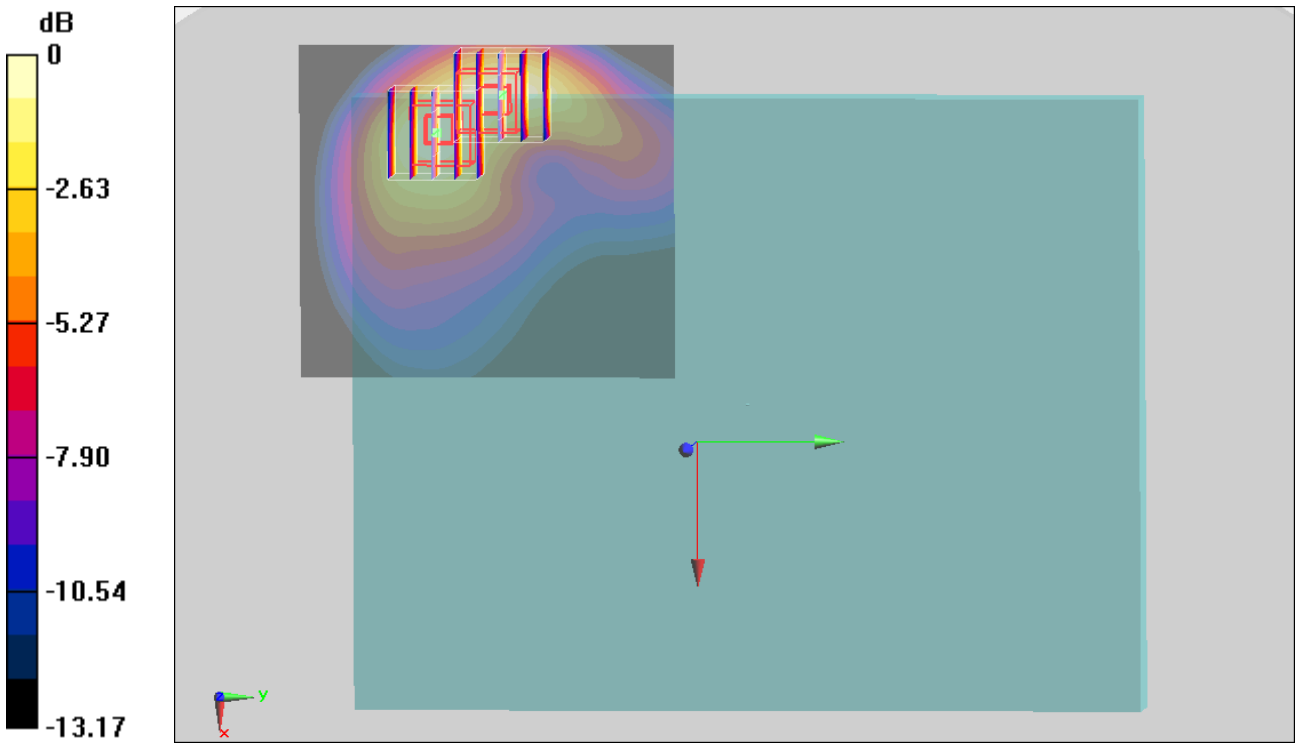

0 dB = 1.03 mW/g = 0.26 dB mW/g

#43_WCDMA V_RMC12.2K_Bottom Face_0cm_Ch4132

DUT: 2N2103-02

Communication System: WCDMA; Frequency: 826.4 MHz;Duty Cycle: 1:1
Medium: MSL_850_121215 Medium parameters used: f = 826.4 MHz; σ = 0.955 mho/m; ε_r = 54.587; ρ = 1000 kg/m^3
Ambient Temperature：22.4 ℃； Liquid Temperature：21.4 ℃

DASY5 Configuration:
- Probe: ET3DV6 - SN1787; ConvF(6.08, 6.08, 6.08); Calibrated: 2012/5/29;
- Sensor-Surface: 4mm (Mechanical Surface Detection)
- Electronics: DAE3 Sn495; Calibrated: 2012/4/23
- Phantom: ELI v4.0; Type: QDOVA001BB; Serial: TP:1127
- Measurement SW: DASY52, Version 52.8 (3); SEMCAD X Version 14.6.5 (6469)

Configuration/Ch4132/Area Scan (81x91x1): Measurement grid: dx=15mm, dy=15mm
Maximum value of SAR (interpolated) = 0.992 mW/g

Configuration/Ch4132/Zoom Scan (5x5x7)/Cube 0: Measurement grid: dx=8mm, dy=8mm, dz=5mm
Reference Value = 33.267 V/m; Power Drift = -0.02 dB
Peak SAR (extrapolated) = 1.390 mW/g
SAR(1 g) = 0.892 mW/g; SAR(10 g) = 0.560 mW/g
Maximum value of SAR (measured) = 0.980 mW/g

Configuration/Ch4132/Zoom Scan (5x5x7)/Cube 1: Measurement grid: dx=8mm, dy=8mm, dz=5mm
Reference Value = 33.267 V/m; Power Drift = -0.02 dB
Peak SAR (extrapolated) = 1.357 mW/g
SAR(1 g) = 0.851 mW/g; SAR(10 g) = 0.521 mW/g
Maximum value of SAR (measured) = 0.923 mW/g

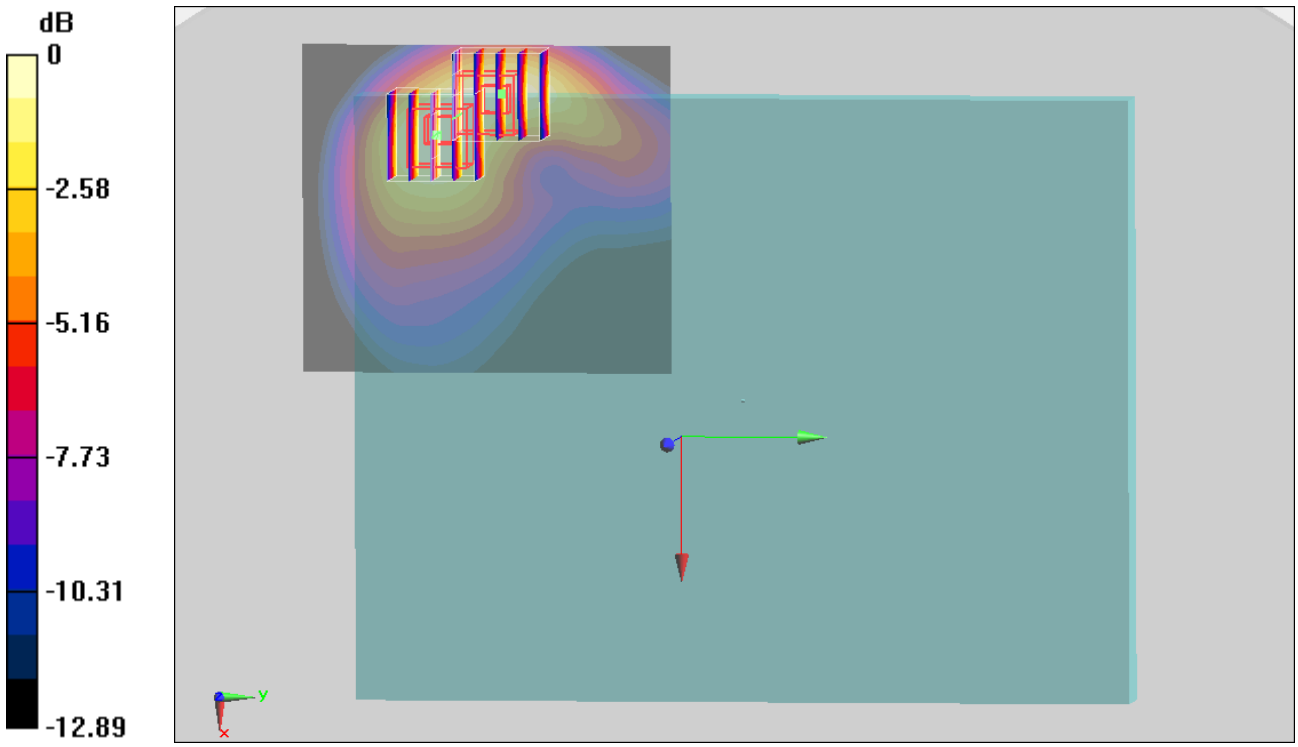

0 dB = 0.923 mW/g = -0.70 dB mW/g

#44_WCDMA V_RMC12.2K_Bottom Face_0cm_Ch4182

DUT: 2N2103-02

Communication System: WCDMA; Frequency: 836.4 MHz;Duty Cycle: 1:1
Medium: MSL_850_121215 Medium parameters used: f = 836.4 MHz; σ = 0.965 mho/m; ε_r = 54.478; ρ = 1000 kg/m^3
Ambient Temperature：22.4 ℃； Liquid Temperature：21.4 ℃

DASY5 Configuration:
- Probe: ET3DV6 - SN1787; ConvF(6.08, 6.08, 6.08); Calibrated: 2012/5/29;
- Sensor-Surface: 4mm (Mechanical Surface Detection)
- Electronics: DAE3 Sn495; Calibrated: 2012/4/23
- Phantom: ELI v4.0; Type: QDOVA001BB; Serial: TP:1127
- Measurement SW: DASY52, Version 52.8 (3); SEMCAD X Version 14.6.5 (6469)

Configuration/Ch4182/Area Scan (81x91x1): Measurement grid: dx=15mm, dy=15mm
Maximum value of SAR (interpolated) = 1.02 mW/g

Configuration/Ch4182/Zoom Scan (5x5x7)/Cube 0: Measurement grid: dx=8mm, dy=8mm, dz=5mm
Reference Value = 33.554 V/m; Power Drift = -0.01 dB
Peak SAR (extrapolated) = 1.429 mW/g
SAR(1 g) = 0.913 mW/g; SAR(10 g) = 0.573 mW/g
Maximum value of SAR (measured) = 1.00 mW/g

Configuration/Ch4182/Zoom Scan (5x5x7)/Cube 1: Measurement grid: dx=8mm, dy=8mm, dz=5mm
Reference Value = 33.554 V/m; Power Drift = -0.01 dB
Peak SAR (extrapolated) = 1.443 mW/g
SAR(1 g) = 0.900 mW/g; SAR(10 g) = 0.545 mW/g
Maximum value of SAR (measured) = 0.974 mW/g

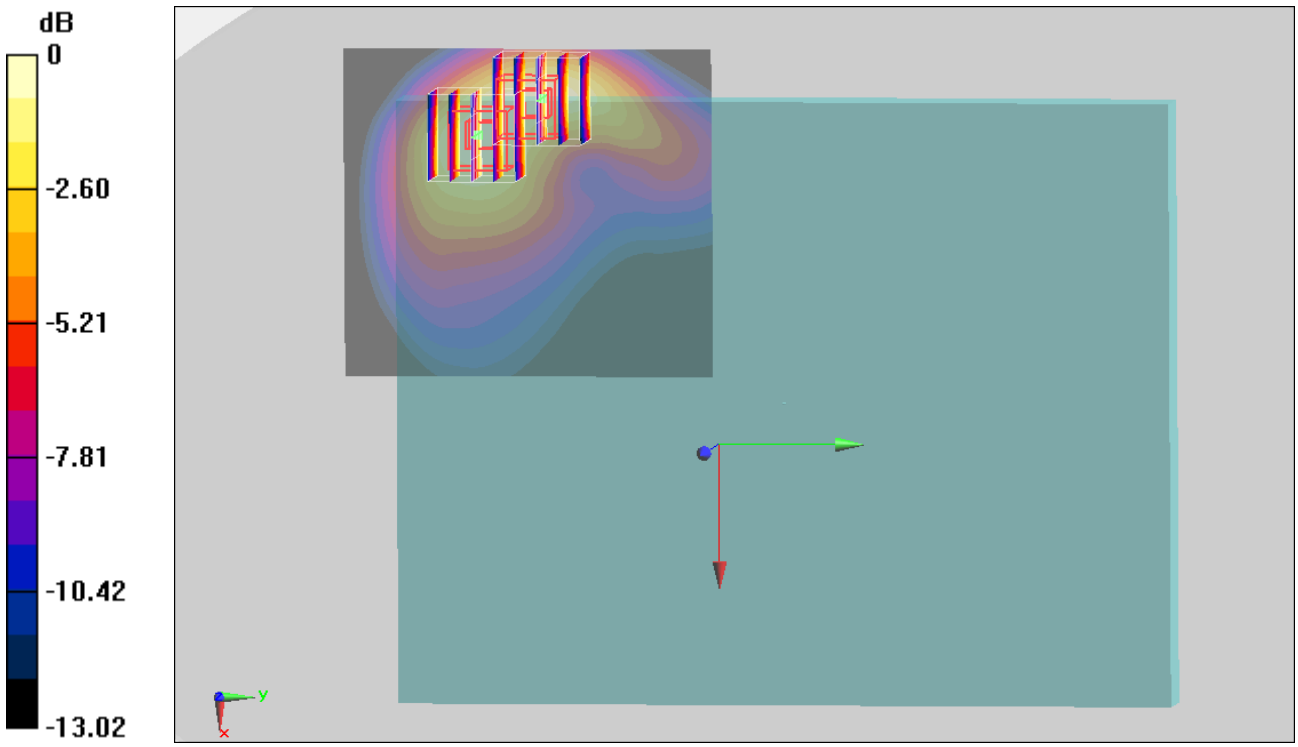

0 dB = 0.974 mW/g = -0.23 dB mW/g

#45_WCDMA V_RMC12.2K_Edge 3_0cm_Ch4233

DUT: 2N2103-02

Communication System: WCDMA; Frequency: 846.6 MHz;Duty Cycle: 1:1
Medium: MSL_850_121215 Medium parameters used: f = 847 MHz; σ = 0.975 mho/m; ε_r = 54.38; ρ = 1000 kg/m^3
Ambient Temperature：22.4 ℃； Liquid Temperature：21.4 ℃

DASY5 Configuration:
- Probe: ET3DV6 - SN1787; ConvF(6.08, 6.08, 6.08); Calibrated: 2012/5/29;
- Sensor-Surface: 4mm (Mechanical Surface Detection)
- Electronics: DAE3 Sn495; Calibrated: 2012/4/23
- Phantom: ELI v4.0; Type: QDOVA001BB; Serial: TP:1127
- Measurement SW: DASY52, Version 52.8 (3); SEMCAD X Version 14.6.5 (6469)

Configuration/Ch4233/Area Scan (41x211x1): Measurement grid: dx=15mm, dy=15mm
Maximum value of SAR (interpolated) = 1.27 mW/g

Configuration/Ch4233/Zoom Scan (5x5x7)/Cube 0: Measurement grid: dx=8mm, dy=8mm, dz=5mm
Reference Value = 38.052 V/m; Power Drift = -0.03 dB
Peak SAR (extrapolated) = 2.110 mW/g
SAR(1 g) = 1.13 mW/g; SAR(10 g) = 0.589 mW/g
Maximum value of SAR (measured) = 1.29 mW/g

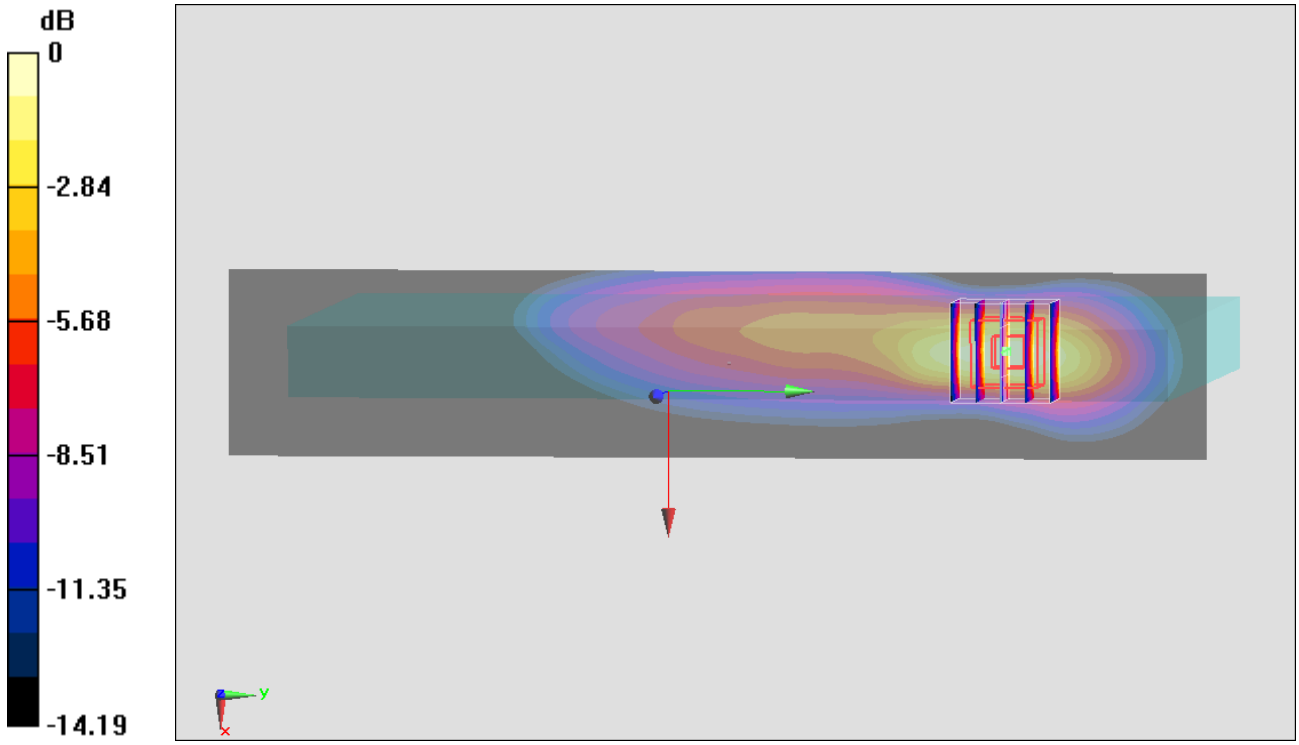

0 dB = 1.29 mW/g = 2.21 dB mW/g

#46_WCDMA V_RMC12.2K_Edge 3_0cm_Ch4132

DUT: 2N2103-02

Communication System: WCDMA; Frequency: 826.4 MHz;Duty Cycle: 1:1
Medium: MSL_850_121215 Medium parameters used: f = 826.4 MHz; σ = 0.955 mho/m; ε_r = 54.587; ρ = 1000 kg/m^3
Ambient Temperature：22.4 ℃； Liquid Temperature：21.4 ℃

DASY5 Configuration:
- Probe: ET3DV6 - SN1787; ConvF(6.08, 6.08, 6.08); Calibrated: 2012/5/29;
- Sensor-Surface: 4mm (Mechanical Surface Detection)
- Electronics: DAE3 Sn495; Calibrated: 2012/4/23
- Phantom: ELI v4.0; Type: QDOVA001BB; Serial: TP:1127
- Measurement SW: DASY52, Version 52.8 (3); SEMCAD X Version 14.6.5 (6469)

Configuration/Ch4132/Area Scan (41x211x1): Measurement grid: dx=15mm, dy=15mm
Maximum value of SAR (interpolated) = 1.08 mW/g

Configuration/Ch4132/Zoom Scan (5x5x7)/Cube 0: Measurement grid: dx=8mm, dy=8mm, dz=5mm
Reference Value = 35.562 V/m; Power Drift = -0.03 dB
Peak SAR (extrapolated) = 1.810 mW/g
SAR(1 g) = 0.970 mW/g; SAR(10 g) = 0.505 mW/g
Maximum value of SAR (measured) = 1.11 mW/g

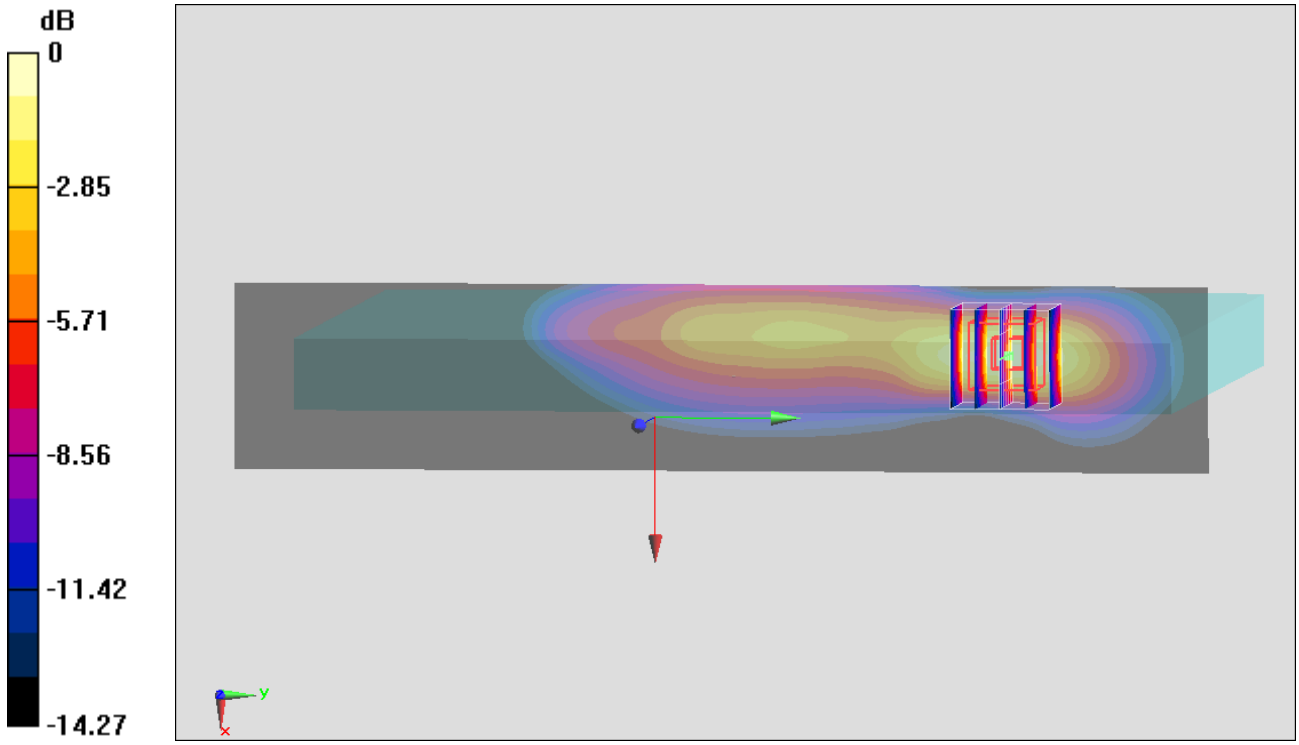

0 dB = 1.11 mW/g = 0.91 dB mW/g

#47_WCDMA V_RMC12.2K_Edge 3_0cm_Ch4182

DUT: 2N2103-02

Communication System: WCDMA; Frequency: 836.4 MHz;Duty Cycle: 1:1
Medium: MSL_850_121215 Medium parameters used: f = 836.4 MHz; σ = 0.965 mho/m; ε_r = 54.478; ρ = 1000 kg/m^3
Ambient Temperature：22.4 ℃； Liquid Temperature：21.4 ℃

DASY5 Configuration:
- Probe: ET3DV6 - SN1787; ConvF(6.08, 6.08, 6.08); Calibrated: 2012/5/29;
- Sensor-Surface: 4mm (Mechanical Surface Detection)
- Electronics: DAE3 Sn495; Calibrated: 2012/4/23
- Phantom: ELI v4.0; Type: QDOVA001BB; Serial: TP:1127
- Measurement SW: DASY52, Version 52.8 (3); SEMCAD X Version 14.6.5 (6469)

Configuration/Ch4182/Area Scan (41x211x1): Measurement grid: dx=15mm, dy=15mm
Maximum value of SAR (interpolated) = 1.16 mW/g

Configuration/Ch4182/Zoom Scan (5x5x7)/Cube 0: Measurement grid: dx=8mm, dy=8mm, dz=5mm
Reference Value = 36.643 V/m; Power Drift = 0.01 dB
Peak SAR (extrapolated) = 1.949 mW/g
SAR(1 g) = 1.05 mW/g; SAR(10 g) = 0.545 mW/g
Maximum value of SAR (measured) = 1.19 mW/g

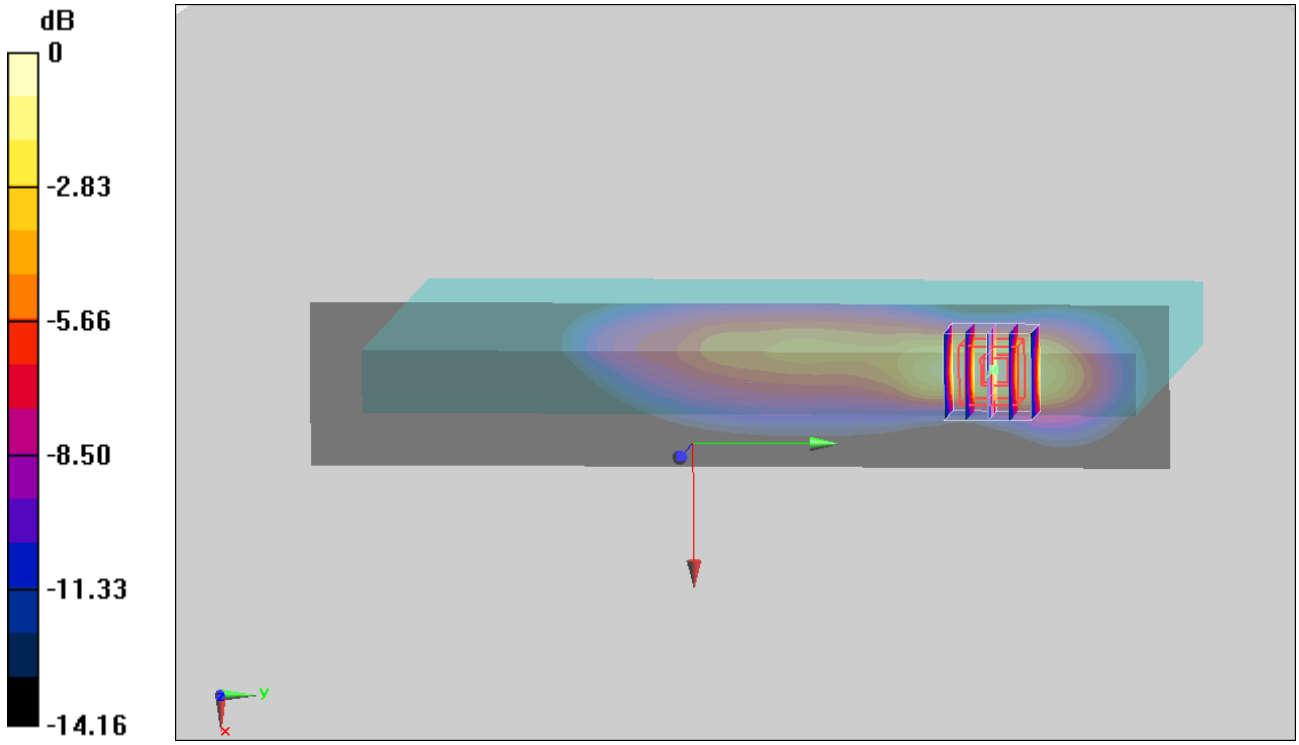

0 dB = 1.19 mW/g = 1.51 dB mW/g

#48_WCDMA V_HSDPA_Edge 3_0cm_Ch4233

DUT: 2N2103-02

Communication System: WCDMA; Frequency: 846.6 MHz;Duty Cycle: 1:1
Medium: MSL_850_121215 Medium parameters used: f = 847 MHz; σ = 0.975 mho/m; ε_r = 54.38; ρ = 1000 kg/m^3
Ambient Temperature：22.4 ℃； Liquid Temperature：21.4 ℃

DASY5 Configuration:
- Probe: ET3DV6 - SN1787; ConvF(6.08, 6.08, 6.08); Calibrated: 2012/5/29;
- Sensor-Surface: 4mm (Mechanical Surface Detection)
- Electronics: DAE3 Sn495; Calibrated: 2012/4/23
- Phantom: ELI v4.0; Type: QDOVA001BB; Serial: TP:1127
- Measurement SW: DASY52, Version 52.8 (3); SEMCAD X Version 14.6.5 (6469)

Configuration/Ch4233/Area Scan (41x211x1): Measurement grid: dx=15mm, dy=15mm
Maximum value of SAR (interpolated) = 1.33 mW/g

Configuration/Ch4233/Zoom Scan (5x5x7)/Cube 0: Measurement grid: dx=8mm, dy=8mm, dz=5mm
Reference Value = 38.605 V/m; Power Drift = -0.02 dB
Peak SAR (extrapolated) = 2.146 mW/g
SAR(1 g) = 1.16 mW/g; SAR(10 g) = 0.604 mW/g
Maximum value of SAR (measured) = 1.32 mW/g

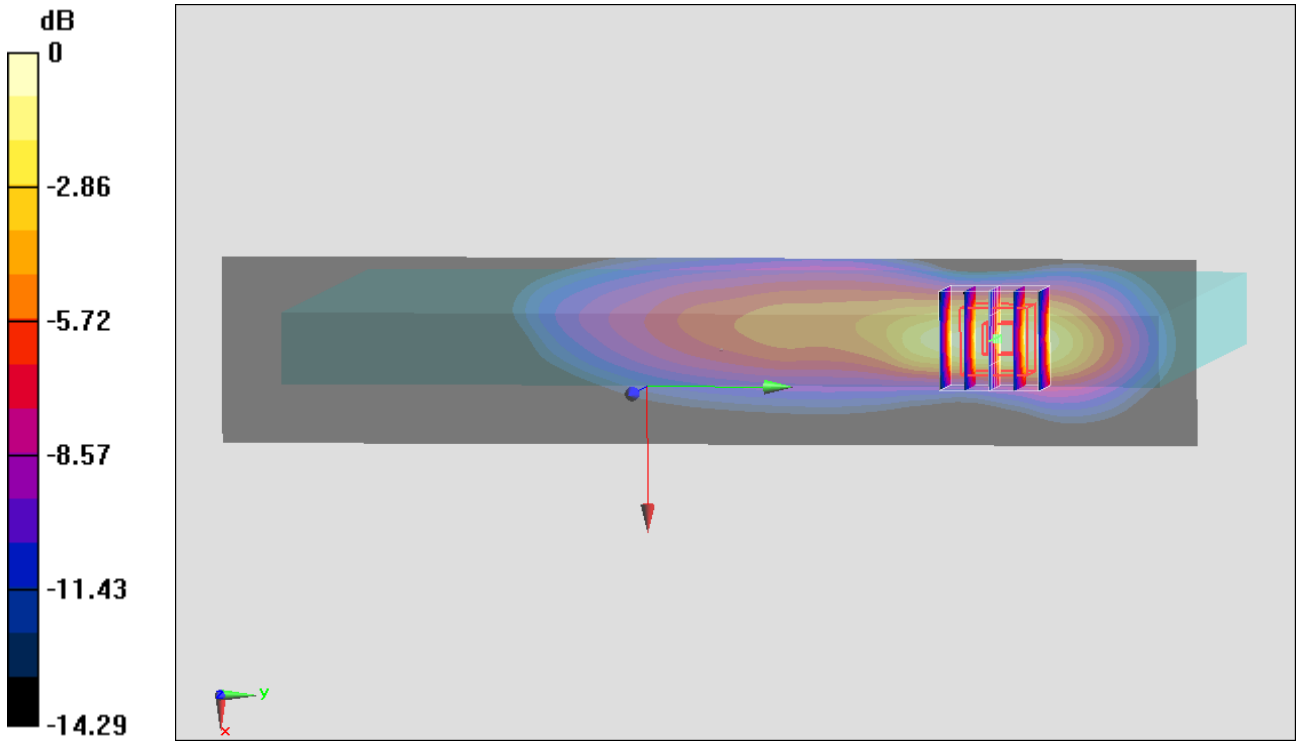

0 dB = 1.32 mW/g = 2.41 dB mW/g

#48_WCDMA V_HSDPA_Edge 3_0cm_Ch4233_2D

DUT: 2N2103-02

Communication System: WCDMA; Frequency: 846.6 MHz;Duty Cycle: 1:1
Medium: MSL_850_121215 Medium parameters used: f = 847 MHz; σ = 0.975 mho/m; ε_r = 54.38; ρ = 1000 kg/m^3
Ambient Temperature：22.4 ℃； Liquid Temperature：21.4 ℃

DASY5 Configuration:
- Probe: ET3DV6 - SN1787; ConvF(6.08, 6.08, 6.08); Calibrated: 2012/5/29;
- Sensor-Surface: 4mm (Mechanical Surface Detection)
- Electronics: DAE3 Sn495; Calibrated: 2012/4/23
- Phantom: ELI v4.0; Type: QDOVA001BB; Serial: TP:1127
- Measurement SW: DASY52, Version 52.8 (3); SEMCAD X Version 14.6.5 (6469)

Configuration/Ch4233/Area Scan (41x211x1): Measurement grid: dx=15mm, dy=15mm
Maximum value of SAR (interpolated) = 1.33 mW/g

Configuration/Ch4233/Zoom Scan (5x5x7)/Cube 0: Measurement grid: dx=8mm, dy=8mm, dz=5mm
Reference Value = 38.605 V/m; Power Drift = -0.02 dB
Peak SAR (extrapolated) = 2.146 mW/g
SAR(1 g) = 1.16 mW/g; SAR(10 g) = 0.604 mW/g
Maximum value of SAR (measured) = 1.32 mW/g

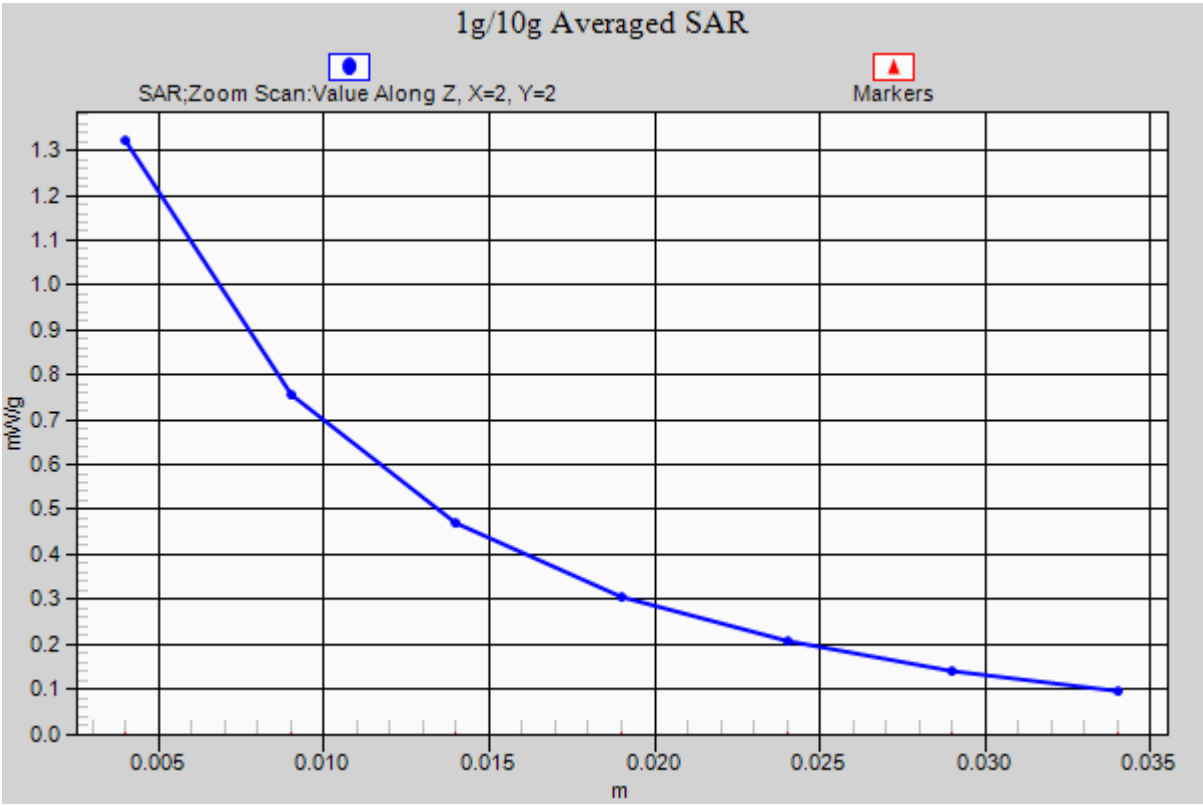

#61_WCDMA V_HSDPA_Edge 3_0cm_Ch4233_Repeat

DUT: 2N2103-02

Communication System: WCDMA; Frequency: 846.6 MHz;Duty Cycle: 1:1
Medium: MSL_850_121215 Medium parameters used: f = 847 MHz; σ = 0.975 mho/m; ε_r = 54.38; ρ = 1000 kg/m^3
Ambient Temperature：22.4 ℃； Liquid Temperature：21.4 ℃

DASY5 Configuration:
- Probe: ET3DV6 - SN1787; ConvF(6.08, 6.08, 6.08); Calibrated: 2012/5/29;
- Sensor-Surface: 4mm (Mechanical Surface Detection)
- Electronics: DAE3 Sn495; Calibrated: 2012/4/23
- Phantom: ELI v4.0; Type: QDOVA001BB; Serial: TP:1127
- Measurement SW: DASY52, Version 52.8 (3); SEMCAD X Version 14.6.5 (6469)

Configuration/Ch4233/Area Scan (41x211x1): Measurement grid: dx=15mm, dy=15mm
Maximum value of SAR (interpolated) = 1.28 mW/g

Configuration/Ch4233/Zoom Scan (5x5x7)/Cube 0: Measurement grid: dx=8mm, dy=8mm, dz=5mm
Reference Value = 37.383 V/m; Power Drift = 0.03 dB
Peak SAR (extrapolated) = 2.026 mW/g
SAR(1 g) = 1.1 mW/g; SAR(10 g) = 0.578 mW/g
Maximum value of SAR (measured) = 1.27 mW/g

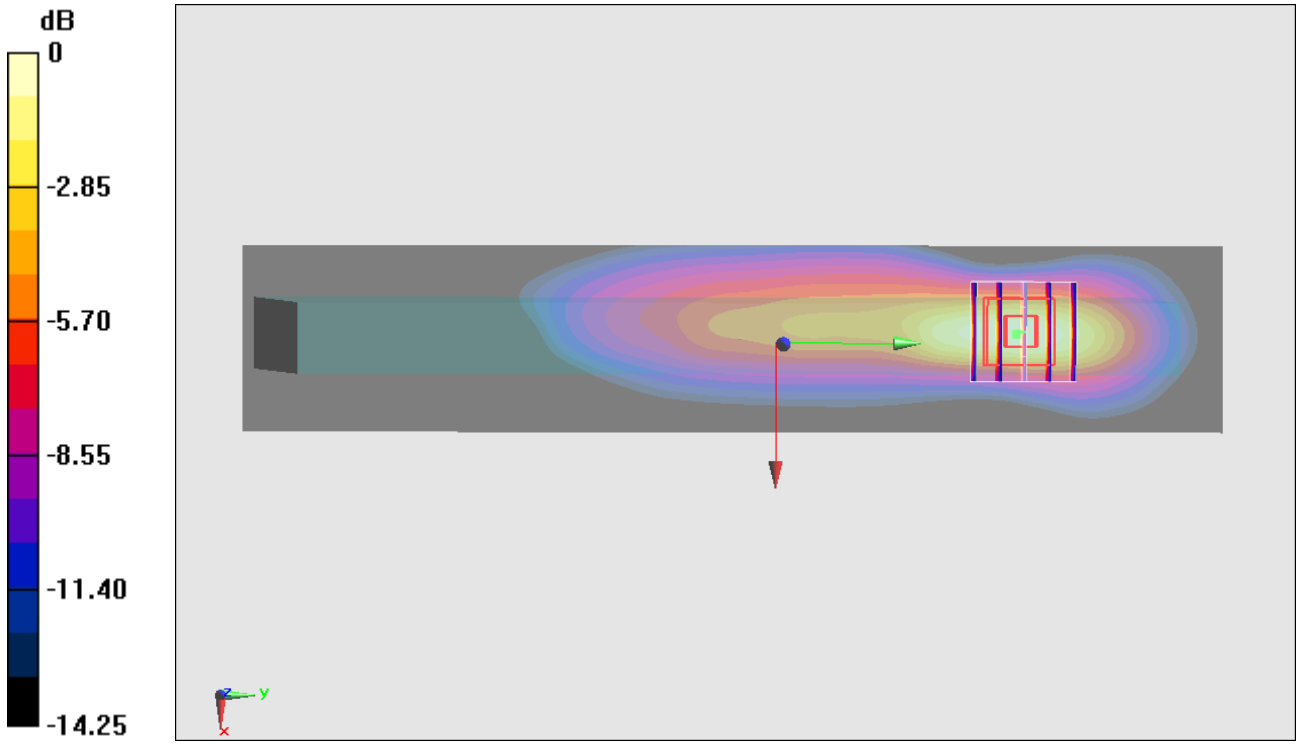

0 dB = 1.27 mW/g = 2.08 dB mW/g

#49_WCDMA V_HSDPA_Edge 3_0cm_Ch4132

DUT: 2N2103-02

Communication System: WCDMA; Frequency: 826.4 MHz;Duty Cycle: 1:1
Medium: MSL_850_121215 Medium parameters used: f = 826.4 MHz; σ = 0.955 mho/m; ε_r = 54.587; ρ = 1000 kg/m^3
Ambient Temperature：22.4 ℃； Liquid Temperature：21.4 ℃

DASY5 Configuration:
- Probe: ET3DV6 - SN1787; ConvF(6.08, 6.08, 6.08); Calibrated: 2012/5/29;
- Sensor-Surface: 4mm (Mechanical Surface Detection)
- Electronics: DAE3 Sn495; Calibrated: 2012/4/23
- Phantom: ELI v4.0; Type: QDOVA001BB; Serial: TP:1127
- Measurement SW: DASY52, Version 52.8 (3); SEMCAD X Version 14.6.5 (6469)

Configuration/Ch4132/Area Scan (41x211x1): Measurement grid: dx=15mm, dy=15mm
Maximum value of SAR (interpolated) = 1.11 mW/g

Configuration/Ch4132/Zoom Scan (5x5x7)/Cube 0: Measurement grid: dx=8mm, dy=8mm, dz=5mm
Reference Value = 35.929 V/m; Power Drift = -0.02 dB
Peak SAR (extrapolated) = 1.844 mW/g
SAR(1 g) = 0.988 mW/g; SAR(10 g) = 0.513 mW/g
Maximum value of SAR (measured) = 1.14 mW/g

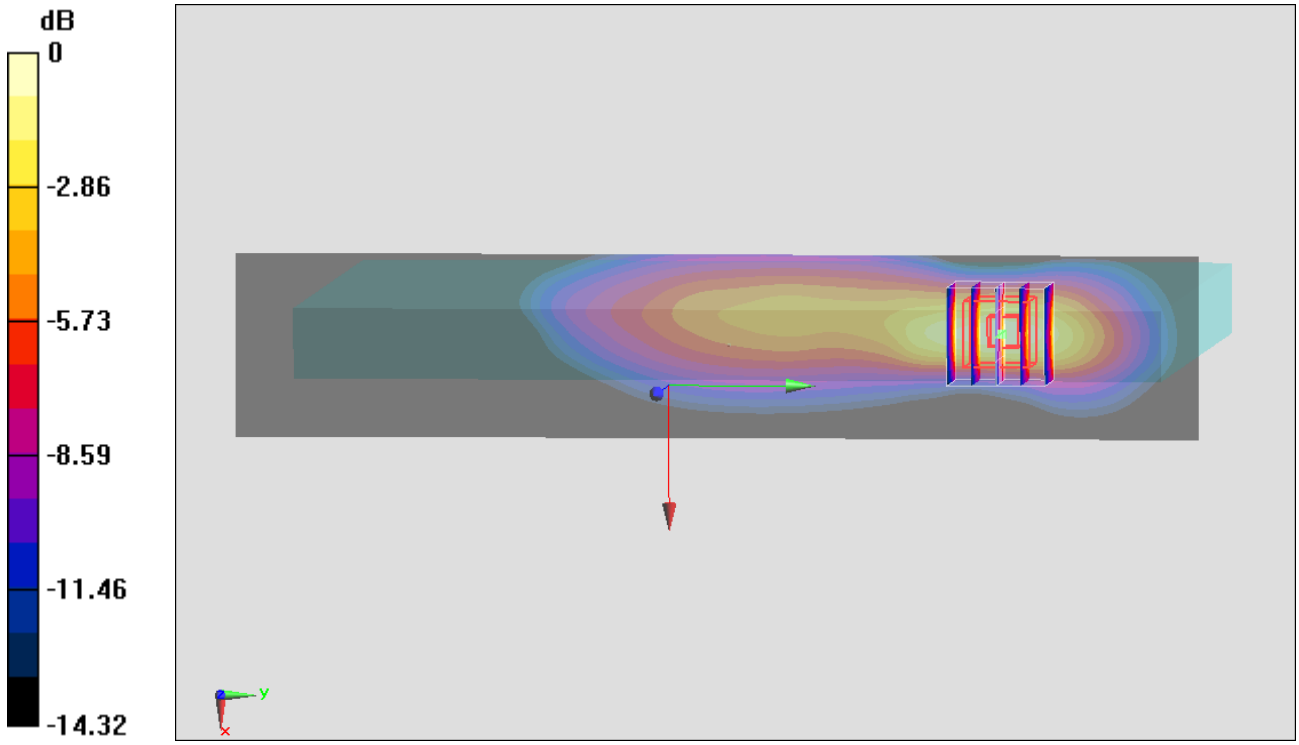

0 dB = 1.14 mW/g = 1.14 dB mW/g

#50_WCDMA V_HSDPA_Edge 3_0cm_Ch4182

DUT: 2N2103-02

Communication System: WCDMA; Frequency: 836.4 MHz;Duty Cycle: 1:1
Medium: MSL_850_121215 Medium parameters used: f = 836.4 MHz; σ = 0.965 mho/m; ε_r = 54.478; ρ = 1000 kg/m^3
Ambient Temperature：22.4 ℃； Liquid Temperature：21.4 ℃

DASY5 Configuration:
- Probe: ET3DV6 - SN1787; ConvF(6.08, 6.08, 6.08); Calibrated: 2012/5/29;
- Sensor-Surface: 4mm (Mechanical Surface Detection)
- Electronics: DAE3 Sn495; Calibrated: 2012/4/23
- Phantom: ELI v4.0; Type: QDOVA001BB; Serial: TP:1127
- Measurement SW: DASY52, Version 52.8 (3); SEMCAD X Version 14.6.5 (6469)

Configuration/Ch4182/Area Scan (41x211x1): Measurement grid: dx=15mm, dy=15mm
Maximum value of SAR (interpolated) = 1.21 mW/g

Configuration/Ch4182/Zoom Scan (5x5x7)/Cube 0: Measurement grid: dx=8mm, dy=8mm, dz=5mm
Reference Value = 37.175 V/m; Power Drift = -0.03 dB
Peak SAR (extrapolated) = 1.998 mW/g
SAR(1 g) = 1.07 mW/g; SAR(10 g) = 0.556 mW/g
Maximum value of SAR (measured) = 1.24 mW/g

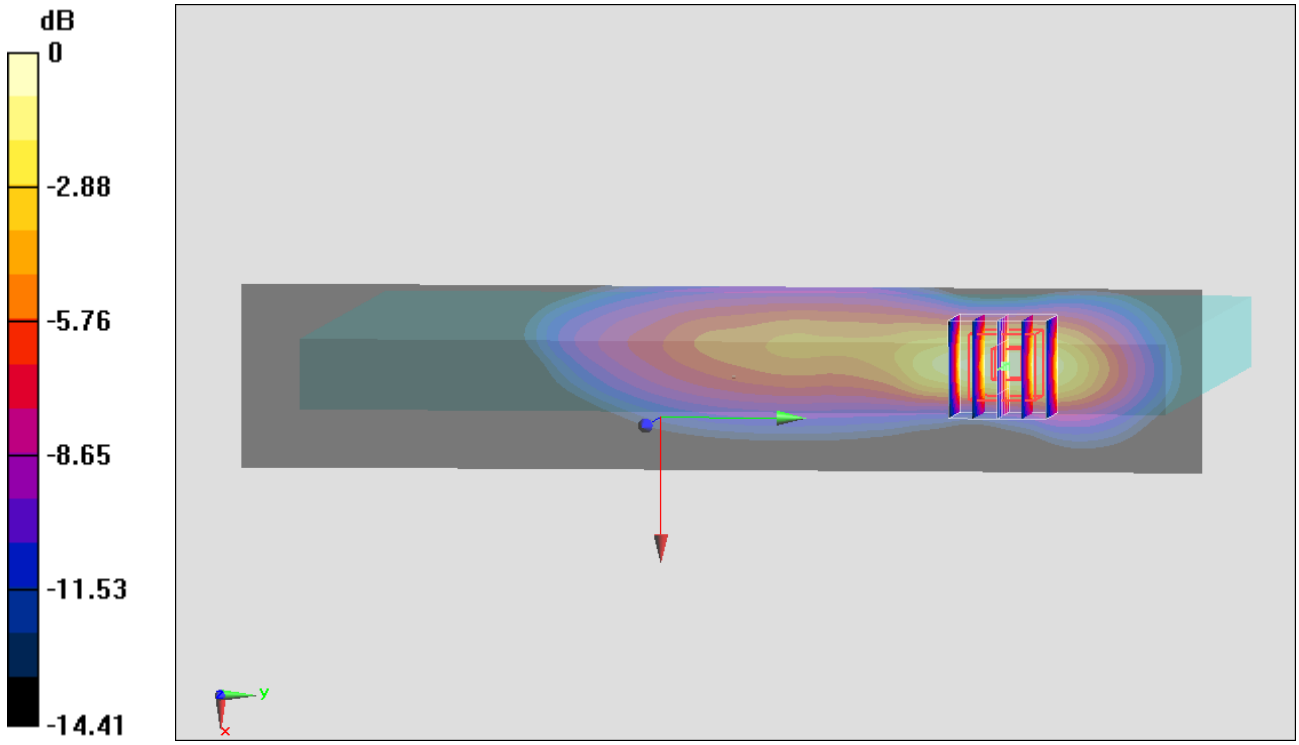

0 dB = 1.24 mW/g = 1.87 dB mW/g

#51_WCDMA V_HSUPA_Edge 3_0cm_Ch4233

DUT: 2N2103-02

Communication System: WCDMA; Frequency: 846.6 MHz;Duty Cycle: 1:1
Medium: MSL_850_121215 Medium parameters used: f = 847 MHz; σ = 0.975 mho/m; ε_r = 54.38; ρ = 1000 kg/m^3
Ambient Temperature：22.4 ℃; Liquid Temperature：21.4 ℃

DASY5 Configuration:
- Probe: ET3DV6 - SN1787; ConvF(6.08, 6.08, 6.08); Calibrated: 2012/5/29;
- Sensor-Surface: 4mm (Mechanical Surface Detection)
- Electronics: DAE3 Sn495; Calibrated: 2012/4/23
- Phantom: ELI v4.0; Type: QDOVA001BB; Serial: TP:1127
- Measurement SW: DASY52, Version 52.8 (3); SEMCAD X Version 14.6.5 (6469)

Configuration/Ch4233/Area Scan (41x211x1): Measurement grid: dx=15mm, dy=15mm
Maximum value of SAR (interpolated) = 1.28 mW/g

Configuration/Ch4233/Zoom Scan (5x5x7)/Cube 0: Measurement grid: dx=8mm, dy=8mm, dz=5mm
Reference Value = 37.439 V/m; Power Drift = 0.00 dB
Peak SAR (extrapolated) = 2.016 mW/g
SAR(1 g) = 1.1 mW/g; SAR(10 g) = 0.572 mW/g
Maximum value of SAR (measured) = 1.26 mW/g

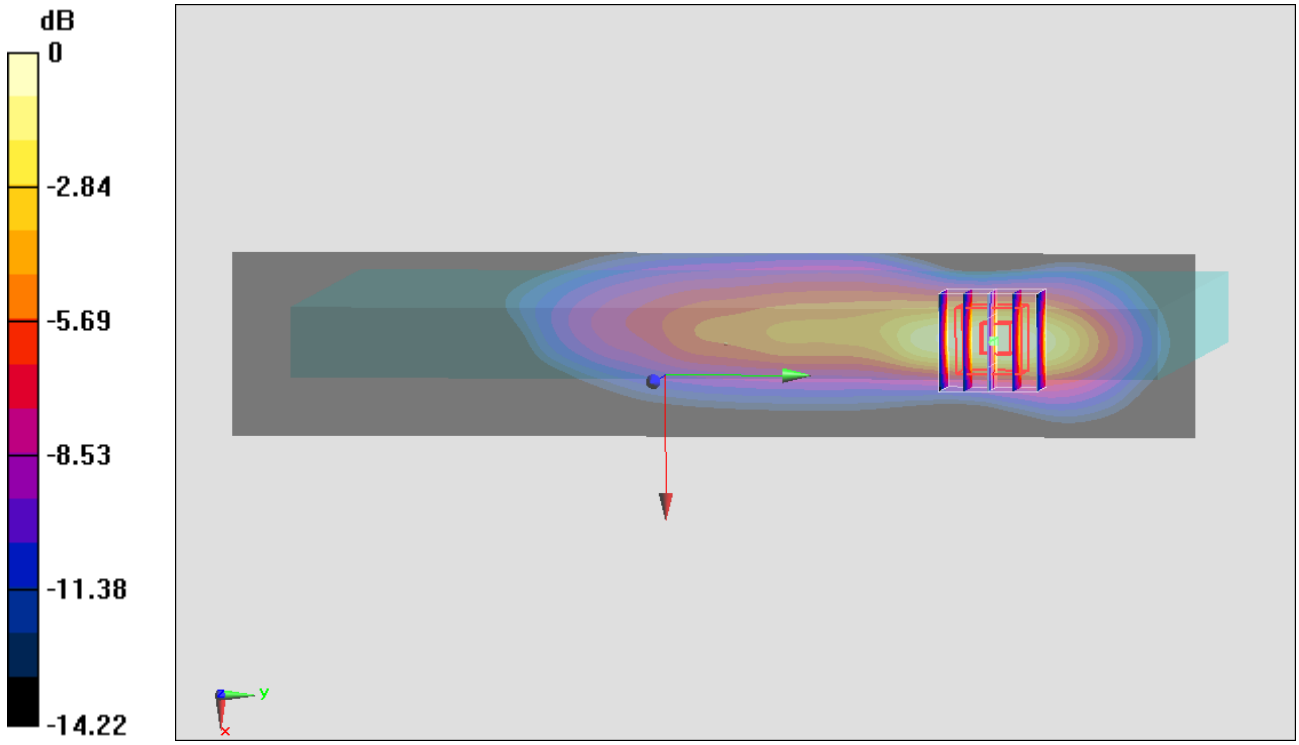

0 dB = 1.26 mW/g = 2.01 dB mW/g

#52_WCDMA V_HSUPA_Edge 3_0cm_Ch4132

DUT: 2N2103-02

Communication System: WCDMA; Frequency: 826.4 MHz;Duty Cycle: 1:1
Medium: MSL_850_121215 Medium parameters used: f = 826.4 MHz; σ = 0.955 mho/m; ε_r = 54.587; ρ = 1000 kg/m^3
Ambient Temperature：22.4 ℃； Liquid Temperature：21.4 ℃

DASY5 Configuration:
- Probe: ET3DV6 - SN1787; ConvF(6.08, 6.08, 6.08); Calibrated: 2012/5/29;
- Sensor-Surface: 4mm (Mechanical Surface Detection)
- Electronics: DAE3 Sn495; Calibrated: 2012/4/23
- Phantom: ELI v4.0; Type: QDOVA001BB; Serial: TP:1127
- Measurement SW: DASY52, Version 52.8 (3); SEMCAD X Version 14.6.5 (6469)

Configuration/Ch4132/Area Scan (41x211x1): Measurement grid: dx=15mm, dy=15mm
Maximum value of SAR (interpolated) = 1.08 mW/g

Configuration/Ch4132/Zoom Scan (5x5x7)/Cube 0: Measurement grid: dx=8mm, dy=8mm, dz=5mm
Reference Value = 34.828 V/m; Power Drift = -0.01 dB
Peak SAR (extrapolated) = 1.725 mW/g
SAR(1 g) = 0.931 mW/g; SAR(10 g) = 0.486 mW/g
Maximum value of SAR (measured) = 1.07 mW/g

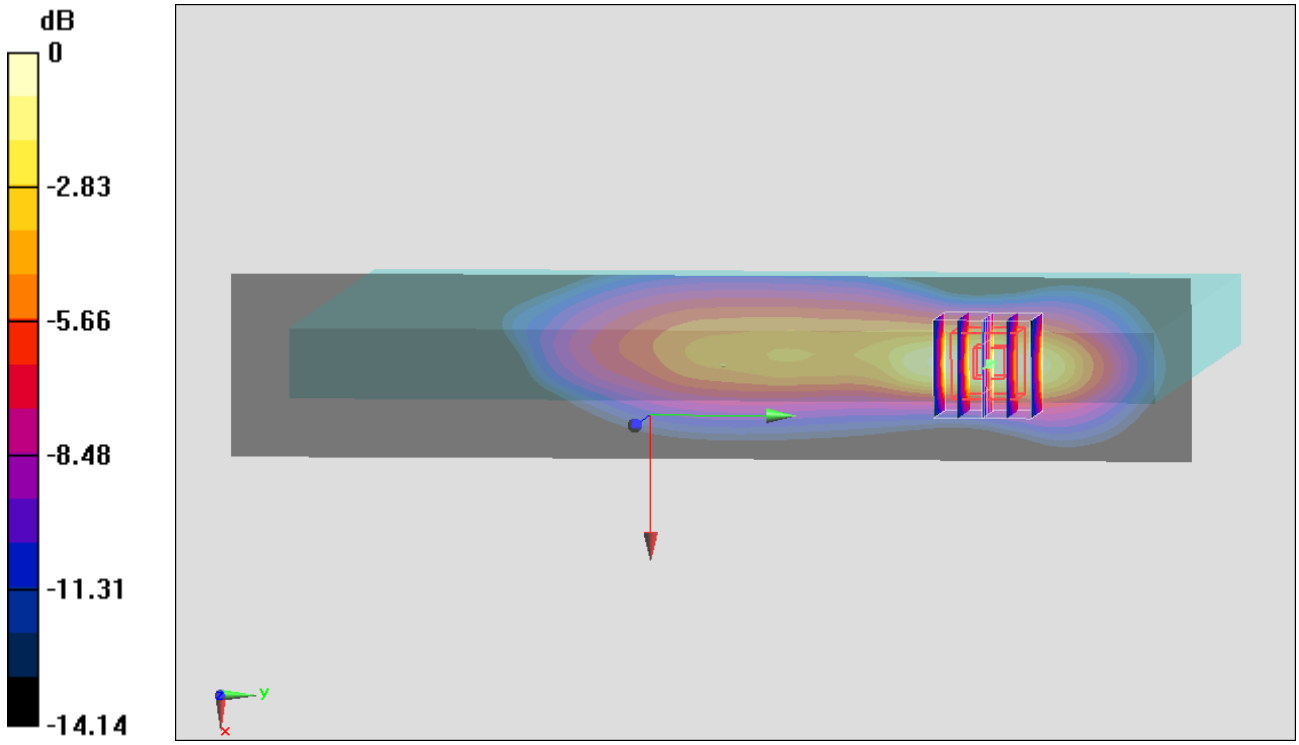

0 dB = 1.07 mW/g = 0.59 dB mW/g

#53_WCDMA V_HSUPA_Edge 3_0cm_Ch4182

DUT: 2N2103-02

Communication System: WCDMA; Frequency: 836.4 MHz;Duty Cycle: 1:1
Medium: MSL_850_121215 Medium parameters used : f = 836.4 MHz; σ = 0.965 mho/m; ε_r = 54.478; ρ = 1000 kg/m^3
Ambient Temperature：22.4 ℃； Liquid Temperature：21.4 ℃

DASY5 Configuration:
- Probe: ET3DV6 - SN1787; ConvF(6.08, 6.08, 6.08); Calibrated: 2012/5/29;
- Sensor-Surface: 4mm (Mechanical Surface Detection)
- Electronics: DAE3 Sn495; Calibrated: 2012/4/23
- Phantom: ELI v4.0; Type: QDOVA001BB; Serial: TP:1127
- Measurement SW: DASY52, Version 52.8 (3); SEMCAD X Version 14.6.5 (6469)

Configuration/Ch4182/Area Scan (41x211x1): Measurement grid: dx=15mm, dy=15mm
Maximum value of SAR (interpolated) = 1.16 mW/g

Configuration/Ch4182/Zoom Scan (5x5x7)/Cube 0: Measurement grid: dx=8mm, dy=8mm, dz=5mm
Reference Value = 35.888 V/m; Power Drift = 0.01 dB
Peak SAR (extrapolated) = 1.849 mW/g
SAR(1 g) = 1 mW/g; SAR(10 g) = 0.524 mW/g
Maximum value of SAR (measured) = 1.15 mW/g

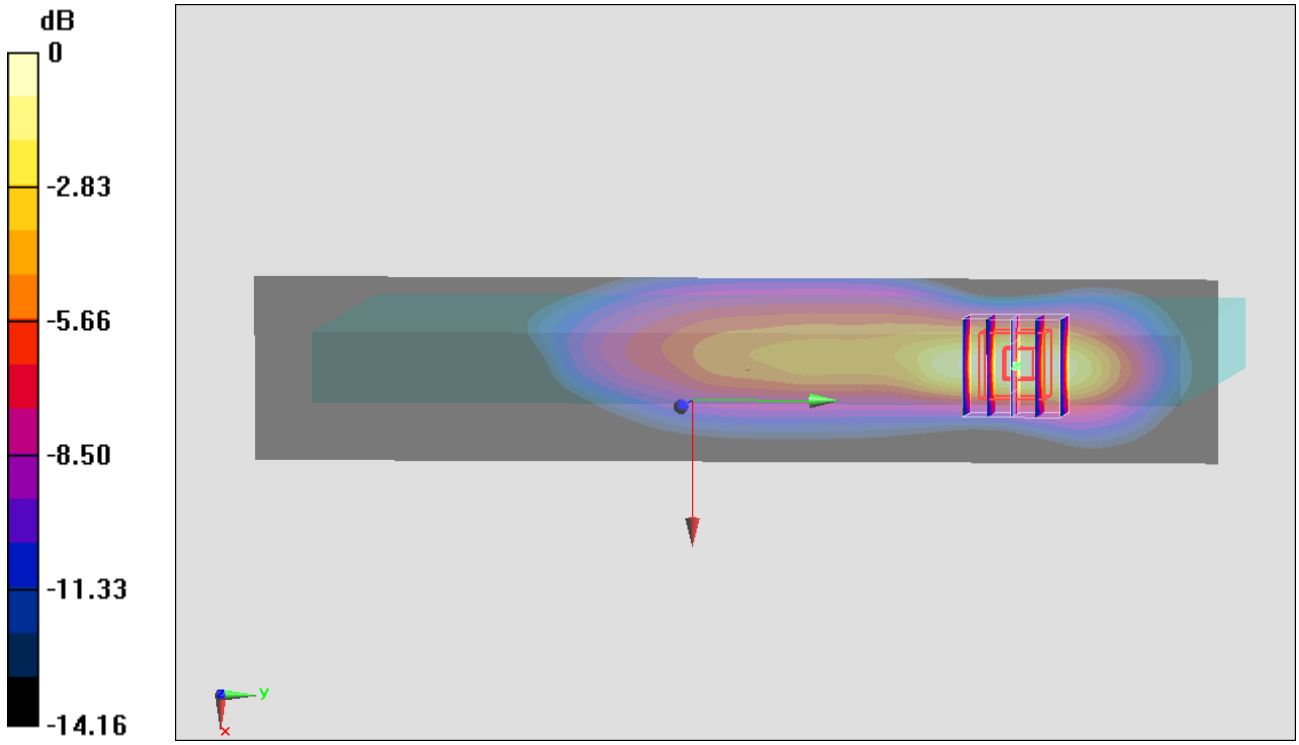

0 dB = 1.15 mW/g = 1.21 dB mW/g

#54_WCDMA V_RMC12.2K_Edge 4_0cm_Ch4233

DUT: 2N2103-02

Communication System: WCDMA; Frequency: 846.6 MHz;Duty Cycle: 1:1
Medium: MSL_850_121215 Medium parameters used: f = 847 MHz; σ = 0.975 mho/m; ε_r = 54.38; ρ = 1000 kg/m^3
Ambient Temperature：22.4 ℃； Liquid Temperature：21.4 ℃

DASY5 Configuration:
- Probe: ET3DV6 - SN1787; ConvF(6.08, 6.08, 6.08); Calibrated: 2012/5/29;
- Sensor-Surface: 4mm (Mechanical Surface Detection)
- Electronics: DAE3 Sn495; Calibrated: 2012/4/23
- Phantom: ELI v4.0; Type: QDOVA001BB; Serial: TP:1127
- Measurement SW: DASY52, Version 52.8 (3); SEMCAD X Version 14.6.5 (6469)

Configuration/Ch4233/Area Scan (41x181x1): Measurement grid: dx=15mm, dy=15mm
Maximum value of SAR (interpolated) = 0.397 mW/g

Configuration/Ch4233/Zoom Scan (5x5x7)/Cube 0: Measurement grid: dx=8mm, dy=8mm, dz=5mm
Reference Value = 22.217 V/m; Power Drift = -0.02 dB
Peak SAR (extrapolated) = 0.745 mW/g
SAR(1 g) = 0.385 mW/g; SAR(10 g) = 0.222 mW/g
Maximum value of SAR (measured) = 0.444 mW/g

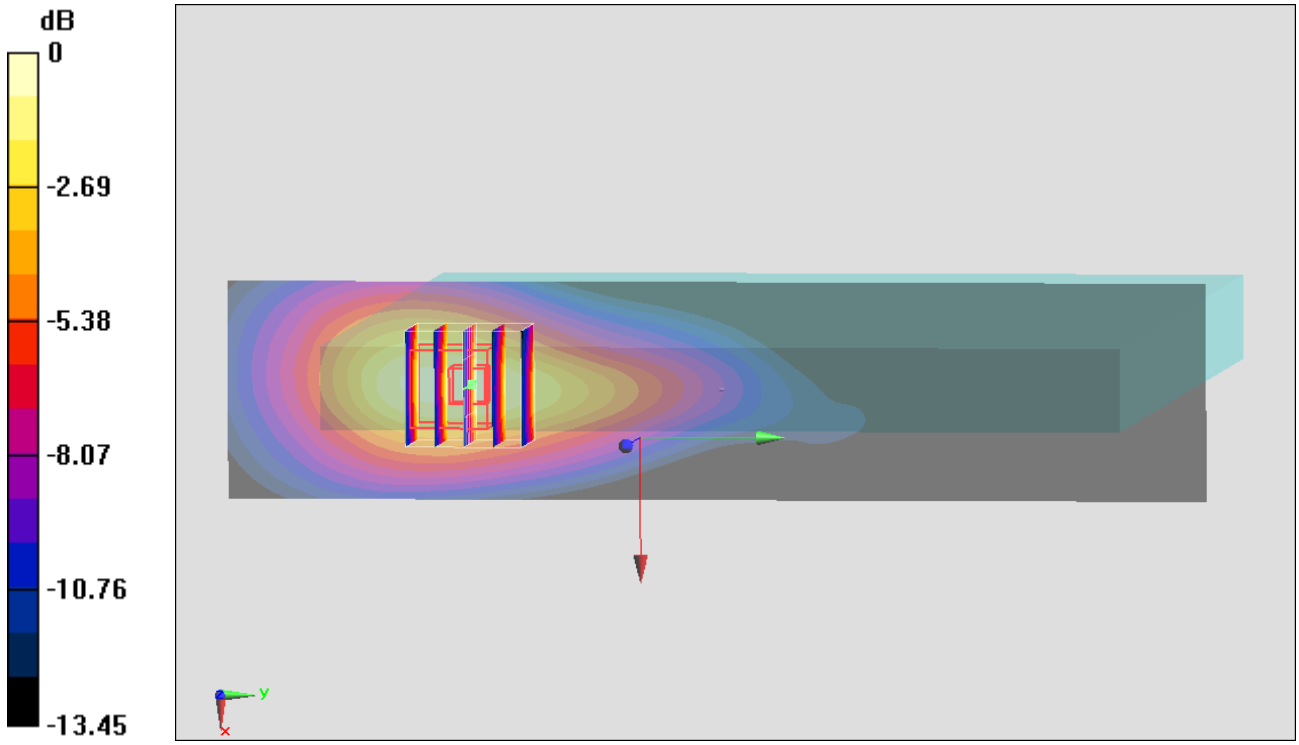

0 dB = 0.444 mW/g = -7.05 dB mW/g

#55_WCDMA V_RMC12.2K_Bottom_0cm_Ch4233

DUT: 2N2103-02

Communication System: WCDMA; Frequency: 846.6 MHz;Duty Cycle: 1:1
Medium: MSL_850_121215 Medium parameters used: f = 847 MHz; σ = 0.975 mho/m; ε_r = 54.38; ρ = 1000 kg/m^3
Ambient Temperature：22.4 ℃； Liquid Temperature：21.4 ℃

DASY5 Configuration:
- Probe: ET3DV6 - SN1787; ConvF(6.08, 6.08, 6.08); Calibrated: 2012/5/29;
- Sensor-Surface: 4mm (Mechanical Surface Detection)
- Electronics: DAE3 Sn495; Calibrated: 2012/4/23
- Phantom: ELI v4.0; Type: QDOVA001BB; Serial: TP:1127
- Measurement SW: DASY52, Version 52.8 (3); SEMCAD X Version 14.6.5 (6469)

Configuration/Ch4233/Area Scan (81x101x1): Measurement grid: dx=15mm, dy=15mm
Maximum value of SAR (interpolated) = 1.01 mW/g

Configuration/Ch4233/Zoom Scan (5x5x7)/Cube 0: Measurement grid: dx=8mm, dy=8mm, dz=5mm
Reference Value = 34.104 V/m; Power Drift = -0.01 dB
Peak SAR (extrapolated) = 1.491 mW/g
SAR(1 g) = 0.954 mW/g; SAR(10 g) = 0.582 mW/g
Maximum value of SAR (measured) = 1.06 mW/g

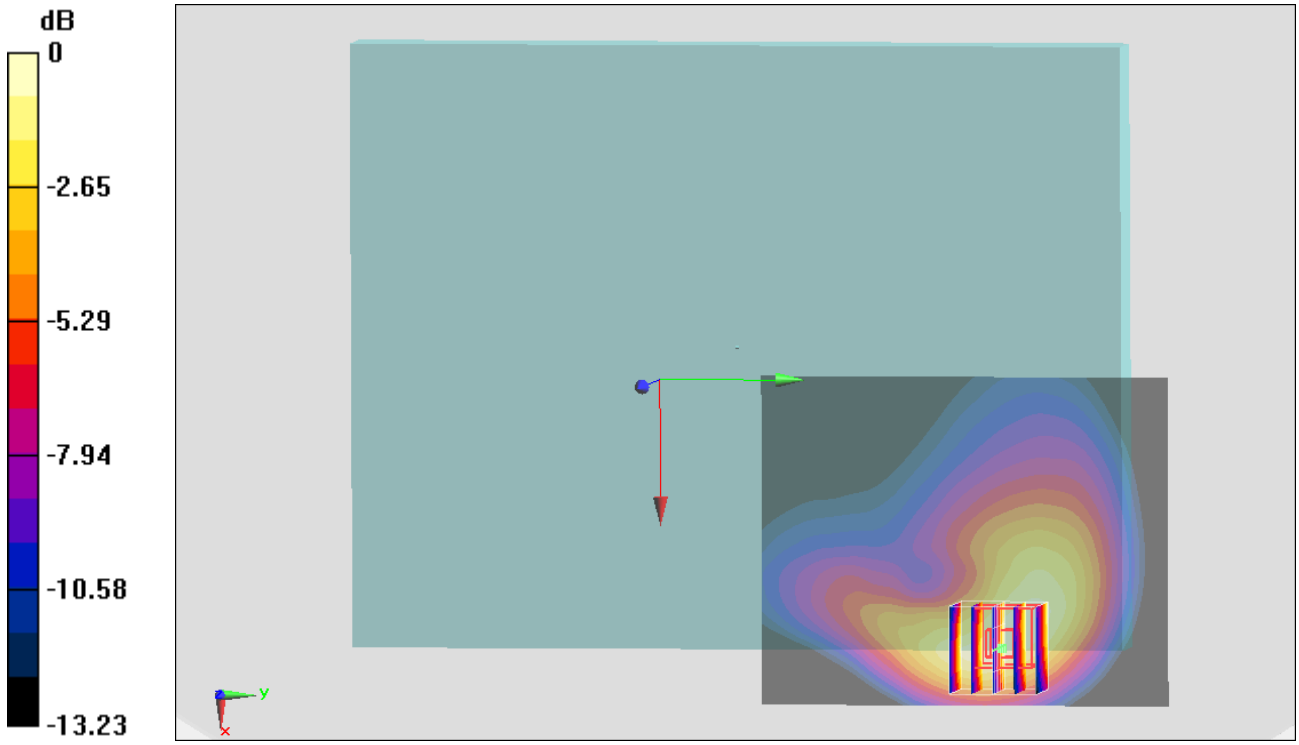

0 dB = 1.06 mW/g = 0.51 dB mW/g

#56_WCDMA V_RMC12.2K_Bottom_0cm_Ch4132

DUT: 2N2103-02

Communication System: WCDMA; Frequency: 826.4 MHz;Duty Cycle: 1:1
Medium: MSL_850_121215 Medium parameters used: f = 826.4 MHz; σ = 0.955 mho/m; ε_r = 54.587; ρ = 1000 kg/m^3
Ambient Temperature：22.4 ℃； Liquid Temperature：21.4 ℃

DASY5 Configuration:
- Probe: ET3DV6 - SN1787; ConvF(6.08, 6.08, 6.08); Calibrated: 2012/5/29;
- Sensor-Surface: 4mm (Mechanical Surface Detection)
- Electronics: DAE3 Sn495; Calibrated: 2012/4/23
- Phantom: ELI v4.0; Type: QDOVA001BB; Serial: TP:1127
- Measurement SW: DASY52, Version 52.8 (3); SEMCAD X Version 14.6.5 (6469)

Configuration/Ch4132/Area Scan (81x101x1): Measurement grid: dx=15mm, dy=15mm
Maximum value of SAR (interpolated) = 0.884 mW/g

Configuration/Ch4132/Zoom Scan (5x5x7)/Cube 0: Measurement grid: dx=8mm, dy=8mm, dz=5mm
Reference Value = 32.120 V/m; Power Drift = -0.02 dB
Peak SAR (extrapolated) = 1.310 mW/g
SAR(1 g) = 0.841 mW/g; SAR(10 g) = 0.518 mW/g
Maximum value of SAR (measured) = 0.929 mW/g

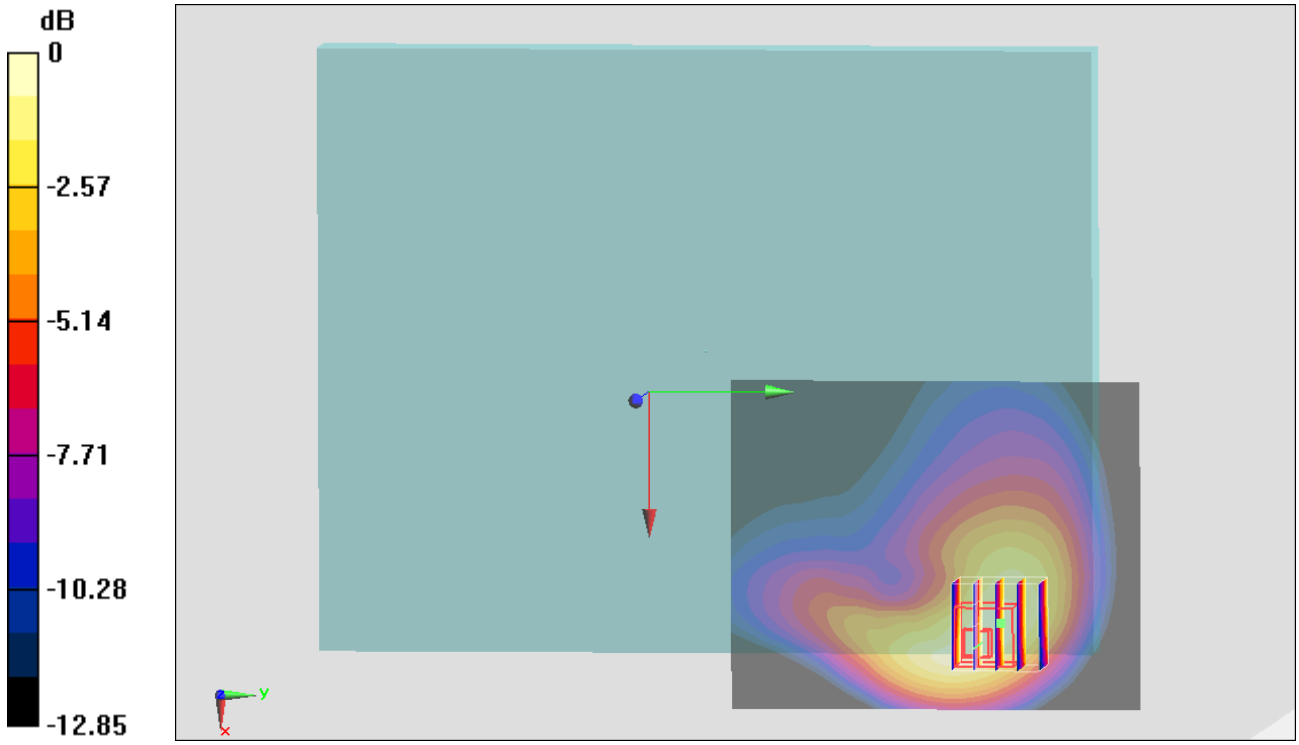

0 dB = 0.929 mW/g = -0.64 dB mW/g

#57_WCDMA V_RMC12.2K_Bottom_0cm_Ch4182

DUT: 2N2103-02

Communication System: WCDMA; Frequency: 836.4 MHz;Duty Cycle: 1:1
Medium: MSL_850_121215 Medium parameters used: f = 836.4 MHz; σ = 0.965 mho/m; ε_r = 54.478; ρ = 1000 kg/m^3
Ambient Temperature：22.4 ℃； Liquid Temperature：21.4 ℃

DASY5 Configuration:
- Probe: ET3DV6 - SN1787; ConvF(6.08, 6.08, 6.08); Calibrated: 2012/5/29;
- Sensor-Surface: 4mm (Mechanical Surface Detection)
- Electronics: DAE3 Sn495; Calibrated: 2012/4/23
- Phantom: ELI v4.0; Type: QDOVA001BB; Serial: TP:1127
- Measurement SW: DASY52, Version 52.8 (3); SEMCAD X Version 14.6.5 (6469)

Configuration/Ch4182/Area Scan (81x101x1): Measurement grid: dx=15mm, dy=15mm
Maximum value of SAR (interpolated) = 0.933 mW/g

Configuration/Ch4182/Zoom Scan (5x5x7)/Cube 0: Measurement grid: dx=8mm, dy=8mm, dz=5mm
Reference Value = 33.065 V/m; Power Drift = -0.01 dB
Peak SAR (extrapolated) = 1.378 mW/g
SAR(1 g) = 0.885 mW/g; SAR(10 g) = 0.546 mW/g
Maximum value of SAR (measured) = 0.985 mW/g

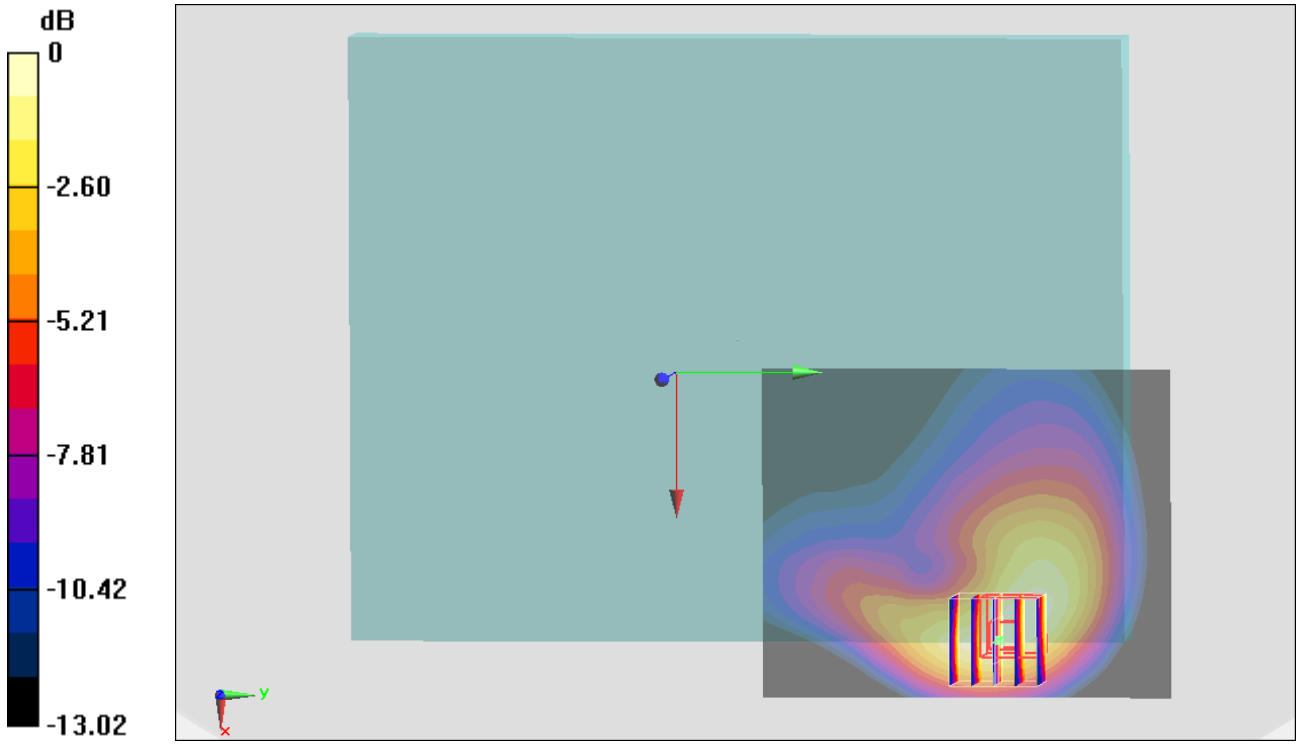

0 dB = 0.985 mW/g = -0.13 dB mW/g

#58_WCDMA V_RMC12.2K_Bottom Face_1cm_Ch4233

DUT: 2N2103-02

Communication System: WCDMA; Frequency: 846.6 MHz;Duty Cycle: 1:1
Medium: MSL_850_121215 Medium parameters used: f = 847 MHz; σ = 0.975 mho/m; ε_r = 54.38; ρ = 1000 kg/m^3
Ambient Temperature：22.4 ℃； Liquid Temperature：21.4 ℃

DASY5 Configuration:
- Probe: ET3DV6 - SN1787; ConvF(6.08, 6.08, 6.08); Calibrated: 2012/5/29;
- Sensor-Surface: 4mm (Mechanical Surface Detection)
- Electronics: DAE3 Sn495; Calibrated: 2012/4/23
- Phantom: ELI v4.0; Type: QDOVA001BB; Serial: TP:1127
- Measurement SW: DASY52, Version 52.8 (3); SEMCAD X Version 14.6.5 (6469)

Configuration/Ch4233/Area Scan (81x91x1): Measurement grid: dx=15mm, dy=15mm
Maximum value of SAR (interpolated) = 0.473 mW/g

Configuration/Ch4233/Zoom Scan (5x5x7)/Cube 0: Measurement grid: dx=8mm, dy=8mm, dz=5mm
Reference Value = 22.782 V/m; Power Drift = -0.02 dB
Peak SAR (extrapolated) = 0.612 mW/g
SAR(1 g) = 0.434 mW/g; SAR(10 g) = 0.294 mW/g
Maximum value of SAR (measured) = 0.468 mW/g

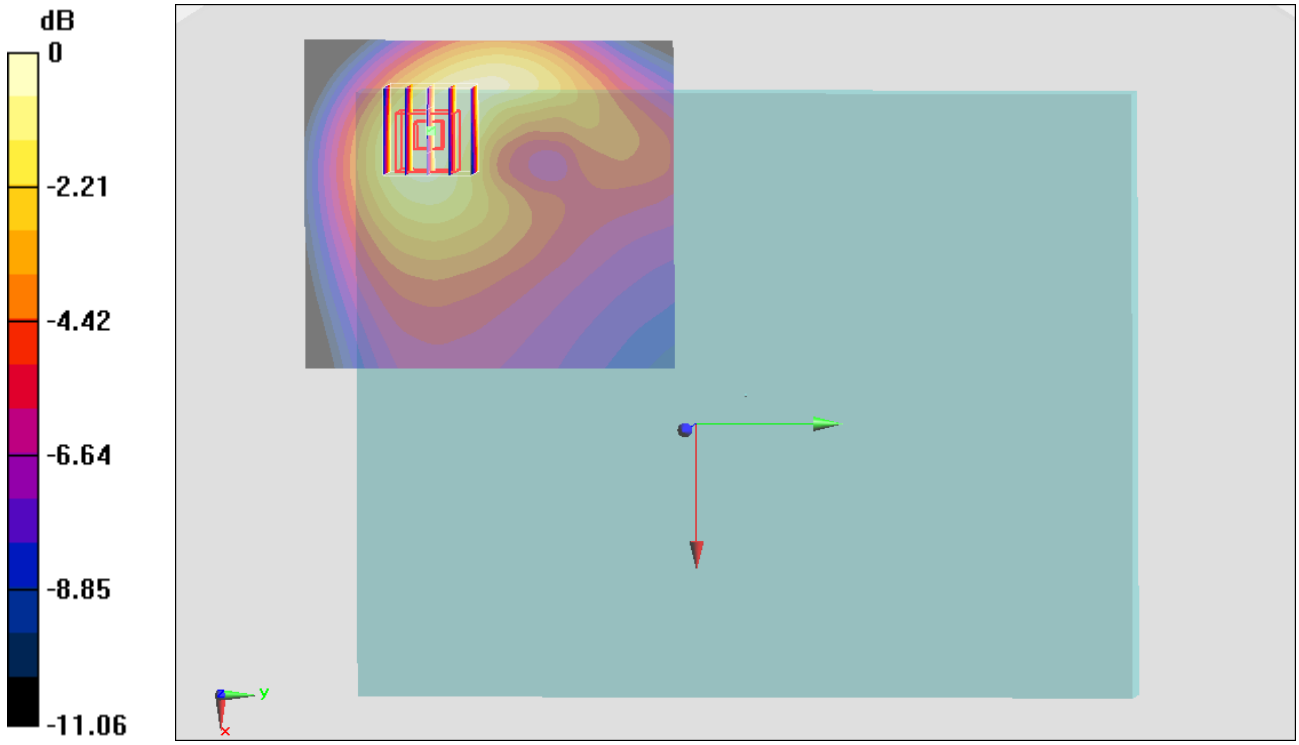

0 dB = 0.468 mW/g = -6.60 dB mW/g

#10_WCDMA II_RMC12.2K_Bottom Face_0cm_Ch9400

DUT: 2N2103-02

Communication System: WCDMA; Frequency: 1880 MHz;Duty Cycle: 1:1
Medium: MSL_1900_121214 Medium parameters used: f = 1880 MHz; σ = 1.51 mho/m; ε_r = 54.235; ρ = 1000 kg/m^3
Ambient Temperature：22.5 ℃； Liquid Temperature：21.5 ℃

DASY5 Configuration:
- Probe: ET3DV6 - SN1787; ConvF(4.58, 4.58, 4.58); Calibrated: 2012/5/29;
- Sensor-Surface: 4mm (Mechanical Surface Detection)
- Electronics: DAE3 Sn495; Calibrated: 2012/4/23
- Phantom: ELI v5.0 Left; Type: QDOVA002AA; Serial: TP:1131
- Measurement SW: DASY52, Version 52.8 (3); SEMCAD X Version 14.6.5 (6469)

Configuration/Ch9400/Area Scan (101x91x1): Measurement grid: dx=15mm, dy=15mm
Maximum value of SAR (interpolated) = 0.943 mW/g

Configuration/Ch9400/Zoom Scan (5x5x7)/Cube 0: Measurement grid: dx=8mm, dy=8mm, dz=5mm
Reference Value = 0.471 V/m; Power Drift = 0.043 dB
Peak SAR (extrapolated) = 1.318 mW/g
SAR(1 g) = 0.826 mW/g; SAR(10 g) = 0.512 mW/g
Maximum value of SAR (measured) = 0.887 mW/g

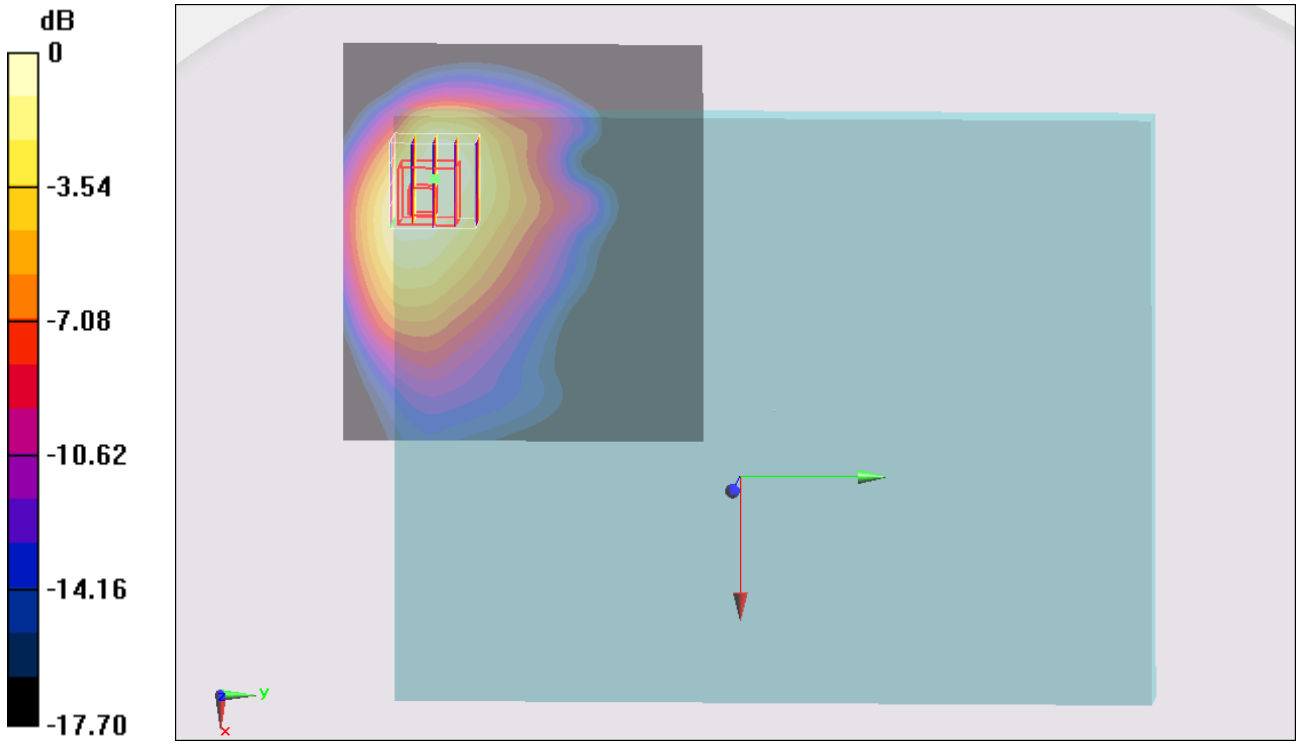

0 dB = 0.887 mW/g = -1.04 dB mW/g

#11_WCDMA II_RMC12.2K_Bottom Face_0cm_Ch9262

DUT: 2N2103-02

Communication System: WCDMA; Frequency: 1852.4 MHz;Duty Cycle: 1:1
Medium: MSL_1900_121214 Medium parameters used : f = 1852.4 MHz; σ = 1.477 mho/m; ε_r = 54.295; ρ = 1000 kg/m^3
Ambient Temperature：22.5 ℃； Liquid Temperature：21.5 ℃

DASY5 Configuration:
- Probe: ET3DV6 - SN1787; ConvF(4.58, 4.58, 4.58); Calibrated: 2012/5/29;
- Sensor-Surface: 4mm (Mechanical Surface Detection)
- Electronics: DAE3 Sn495; Calibrated: 2012/4/23
- Phantom: ELI v5.0 Left; Type: QDOVA002AA; Serial: TP:1131
- Measurement SW: DASY52, Version 52.8 (3); SEMCAD X Version 14.6.5 (6469)

Configuration/Ch9262/Area Scan (101x91x1): Measurement grid: dx=15mm, dy=15mm
Maximum value of SAR (interpolated) = 0.884 mW/g

Configuration/Ch9262/Zoom Scan (5x5x7)/Cube 0: Measurement grid: dx=8mm, dy=8mm, dz=5mm
Reference Value = 0.750 V/m; Power Drift = -0.15 dB
Peak SAR (extrapolated) = 1.223 mW/g
SAR(1 g) = 0.777 mW/g; SAR(10 g) = 0.484 mW/g
Maximum value of SAR (measured) = 0.833 mW/g

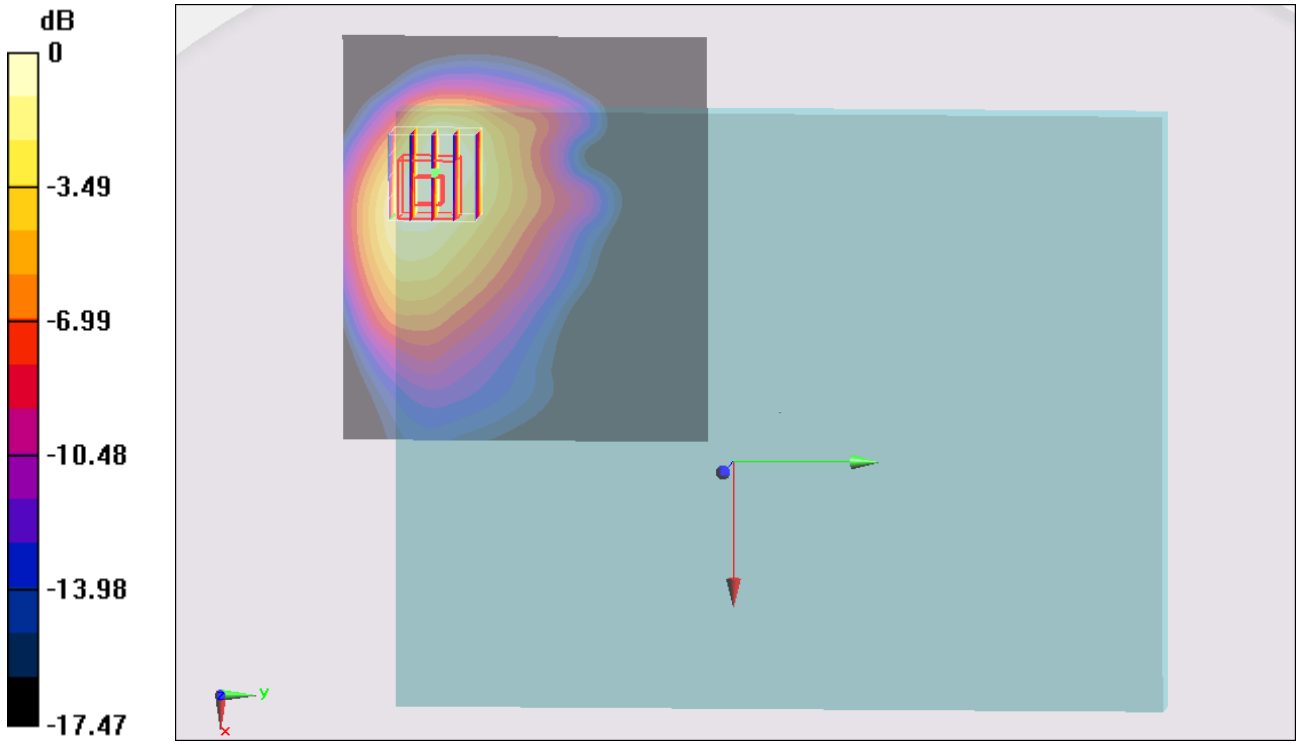

0 dB = 0.833 mW/g = -1.59 dB mW/g

#12_WCDMA II_RMC12.2K_Bottom Face_0cm_Ch9538

DUT: 2N2103-02

Communication System: WCDMA; Frequency: 1907.6 MHz;Duty Cycle: 1:1
Medium: MSL_1900_121214 Medium parameters used: f = 1908 MHz; σ = 1.54 mho/m; ε_r = 54.116; ρ = 1000 kg/m^3
Ambient Temperature：22.5 ℃; Liquid Temperature：21.5 ℃

DASY5 Configuration:
- Probe: ET3DV6 - SN1787; ConvF(4.58, 4.58, 4.58); Calibrated: 2012/5/29;
- Sensor-Surface: 4mm (Mechanical Surface Detection)
- Electronics: DAE3 Sn495; Calibrated: 2012/4/23
- Phantom: ELI v5.0 Left; Type: QDOVA002AA; Serial: TP:1131
- Measurement SW: DASY52, Version 52.8 (3); SEMCAD X Version 14.6.5 (6469)

Configuration/Ch9538/Area Scan (101x91x1): Measurement grid: dx=15mm, dy=15mm
Maximum value of SAR (interpolated) = 0.913 mW/g

Configuration/Ch9538/Zoom Scan (5x5x7)/Cube 0: Measurement grid: dx=8mm, dy=8mm, dz=5mm
Reference Value = 0.398 V/m; Power Drift = -0.122 dB
Peak SAR (extrapolated) = 1.300 mW/g
SAR(1 g) = 0.821 mW/g; SAR(10 g) = 0.500 mW/g
Maximum value of SAR (measured) = 0.894 mW/g

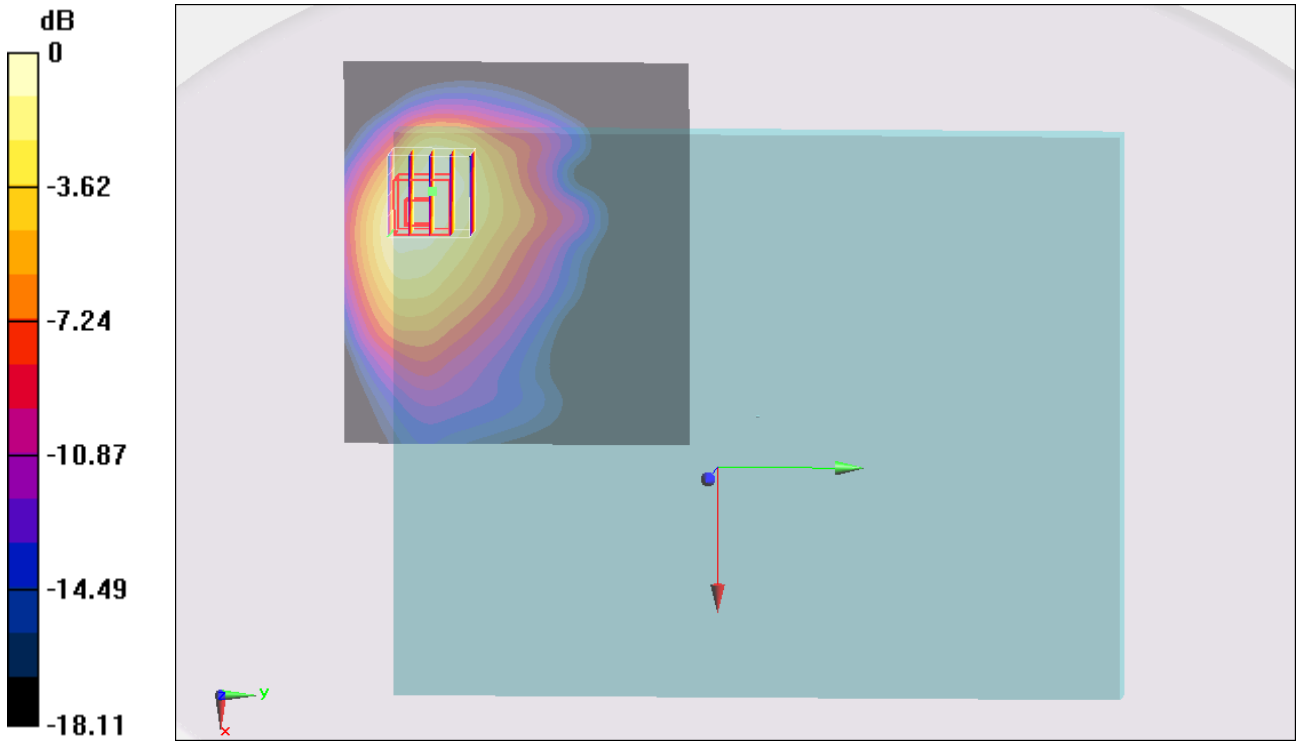

0 dB = 0.894 mW/g = -0.97 dB mW/g

#13_WCDMA II_RMC12.2K_Edge 3_0cm_Ch9400

DUT: 2N2103-02

Communication System: WCDMA; Frequency: 1880 MHz;Duty Cycle: 1:1
Medium: MSL_1900_121214 Medium parameters used: f = 1880 MHz; σ = 1.51 mho/m; ε_r = 54.235; ρ = 1000 kg/m^3
Ambient Temperature：22.5 ℃； Liquid Temperature：21.5 ℃

DASY5 Configuration:
- Probe: ET3DV6 - SN1787; ConvF(4.58, 4.58, 4.58); Calibrated: 2012/5/29;
- Sensor-Surface: 4mm (Mechanical Surface Detection)
- Electronics: DAE3 Sn495; Calibrated: 2012/4/23
- Phantom: ELI v5.0 Left; Type: QDOVA002AA; Serial: TP:1131
- Measurement SW: DASY52, Version 52.8 (3); SEMCAD X Version 14.6.5 (6469)

Configuration/Ch9400/Area Scan (51x211x1): Measurement grid: dx=15mm, dy=15mm
Maximum value of SAR (interpolated) = 0.956 mW/g

Configuration/Ch9400/Zoom Scan (5x5x7)/Cube 0: Measurement grid: dx=8mm, dy=8mm, dz=5mm
Reference Value = 0 V/m; Power Drift = 0.001 dB
Peak SAR (extrapolated) = 1.561 mW/g
SAR(1 g) = 0.757 mW/g; SAR(10 g) = 0.362 mW/g
Maximum value of SAR (measured) = 0.910 mW/g

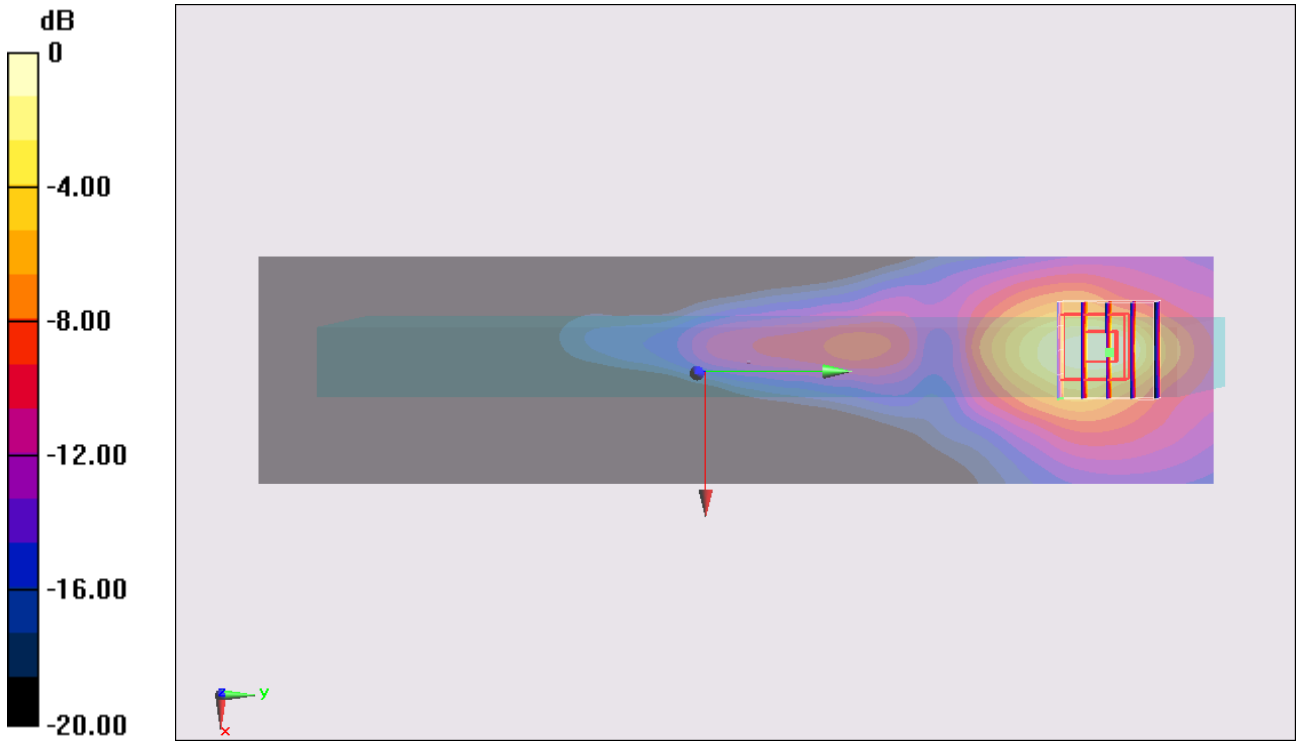

0 dB = 0.910 mW/g = -0.82 dB mW/g

#14_WCDMA II_RMC12.2K_Edge 3_0cm_Ch9262

DUT: 2N2103-02

Communication System: WCDMA; Frequency: 1852.4 MHz;Duty Cycle: 1:1
Medium: MSL_1900_121214 Medium parameters used : f = 1852.4 MHz; σ = 1.477 mho/m; ε_r = 54.295; ρ = 1000 kg/m^3
Ambient Temperature：22.5 ℃； Liquid Temperature：21.5 ℃

DASY5 Configuration:
- Probe: ET3DV6 - SN1787; ConvF(4.58, 4.58, 4.58); Calibrated: 2012/5/29;
- Sensor-Surface: 4mm (Mechanical Surface Detection)
- Electronics: DAE3 Sn495; Calibrated: 2012/4/23
- Phantom: ELI v5.0 Left; Type: QDOVA002AA; Serial: TP:1131
- Measurement SW: DASY52, Version 52.8 (3); SEMCAD X Version 14.6.5 (6469)

Configuration/Ch9262/Area Scan (51x211x1): Measurement grid: dx=15mm, dy=15mm
Maximum value of SAR (interpolated) = 0.882 mW/g

Configuration/Ch9262/Zoom Scan (5x5x7)/Cube 0: Measurement grid: dx=8mm, dy=8mm, dz=5mm
Reference Value = 0.421 V/m; Power Drift = 0.19 dB
Peak SAR (extrapolated) = 1.501 mW/g
SAR(1 g) = 0.739 mW/g; SAR(10 g) = 0.355 mW/g
Maximum value of SAR (measured) = 0.896 mW/g

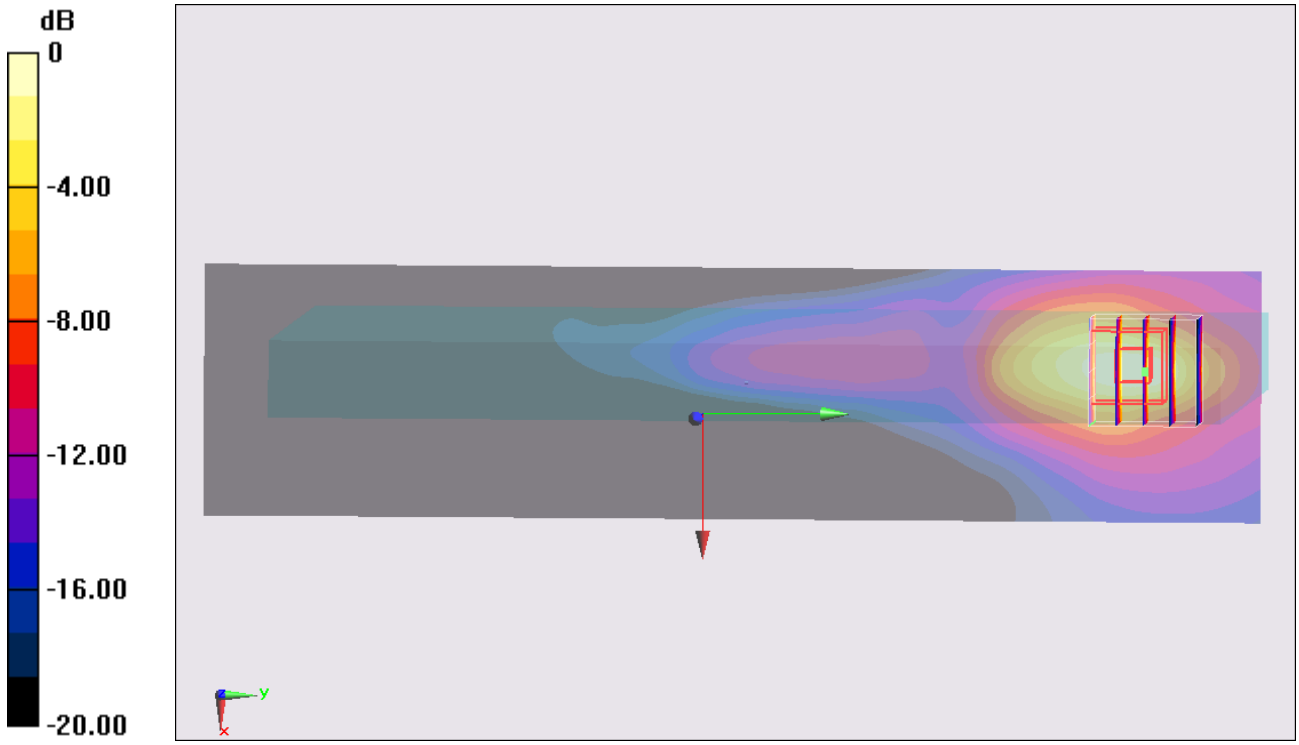

0 dB = 0.896 mW/g = -0.95 dB mW/g

#15_WCDMA II_RMC12.2K_Edge 3_0cm_Ch9538

DUT: 2N2103-02

Communication System: WCDMA; Frequency: 1907.6 MHz;Duty Cycle: 1:1
Medium: MSL_1900_121214 Medium parameters used: f = 1908 MHz; σ = 1.54 mho/m; ε_r = 54.116; ρ = 1000 kg/m^3
Ambient Temperature：22.5 ℃; Liquid Temperature：21.5 ℃

DASY5 Configuration:
- Probe: ET3DV6 - SN1787; ConvF(4.58, 4.58, 4.58); Calibrated: 2012/5/29;
- Sensor-Surface: 4mm (Mechanical Surface Detection)
- Electronics: DAE3 Sn495; Calibrated: 2012/4/23
- Phantom: ELI v5.0 Left; Type: QDOVA002AA; Serial: TP:1131
- Measurement SW: DASY52, Version 52.8 (3); SEMCAD X Version 14.6.5 (6469)

Configuration/Ch9538/Area Scan (51x211x1): Measurement grid: dx=15mm, dy=15mm
Maximum value of SAR (interpolated) = 0.856 mW/g

Configuration/Ch9538/Zoom Scan (5x5x7)/Cube 0: Measurement grid: dx=8mm, dy=8mm, dz=5mm
Reference Value = 0.313 V/m; Power Drift = -0.12 dB
Peak SAR (extrapolated) = 1.525 mW/g
SAR(1 g) = 0.726 mW/g; SAR(10 g) = 0.344 mW/g
Maximum value of SAR (measured) = 0.885 mW/g

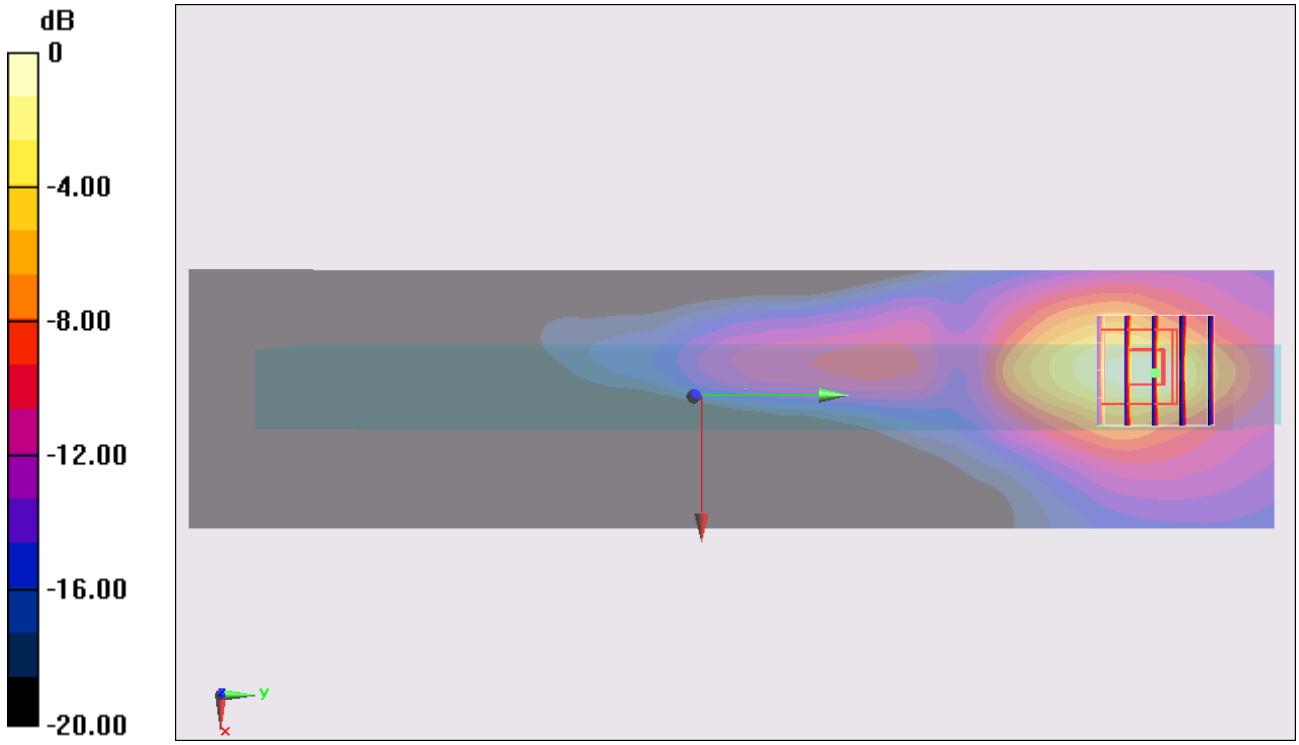

0 dB = 0.885 mW/g = -1.06 dB mW/g

#16_WCDMA II_RMC12.2K_Edge 4_0cm_Ch9400

DUT: 2N2103-02

Communication System: WCDMA; Frequency: 1880 MHz;Duty Cycle: 1:1
Medium: MSL_1900_121214 Medium parameters used: f = 1880 MHz; σ = 1.51 mho/m; ε_r = 54.235; ρ = 1000 kg/m^3
Ambient Temperature：22.5 ℃; Liquid Temperature：21.5 ℃

DASY5 Configuration:
- Probe: ET3DV6 - SN1787; ConvF(4.58, 4.58, 4.58); Calibrated: 2012/5/29;
- Sensor-Surface: 4mm (Mechanical Surface Detection)
- Electronics: DAE3 Sn495; Calibrated: 2012/4/23
- Phantom: ELI v5.0 Left; Type: QDOVA002AA; Serial: TP:1131
- Measurement SW: DASY52, Version 52.8 (3); SEMCAD X Version 14.6.5 (6469)

Configuration/Ch9400/Area Scan (51x181x1): Measurement grid: dx=15mm, dy=15mm
Maximum value of SAR (interpolated) = 1.21 mW/g

Configuration/Ch9400/Zoom Scan (5x5x7)/Cube 0: Measurement grid: dx=8mm, dy=8mm, dz=5mm
Reference Value = 3.953 V/m; Power Drift = 0.01 dB
Peak SAR (extrapolated) = 1.715 mW/g
SAR(1 g) = 1.05 mW/g; SAR(10 g) = 0.586 mW/g
Maximum value of SAR (measured) = 1.19 mW/g

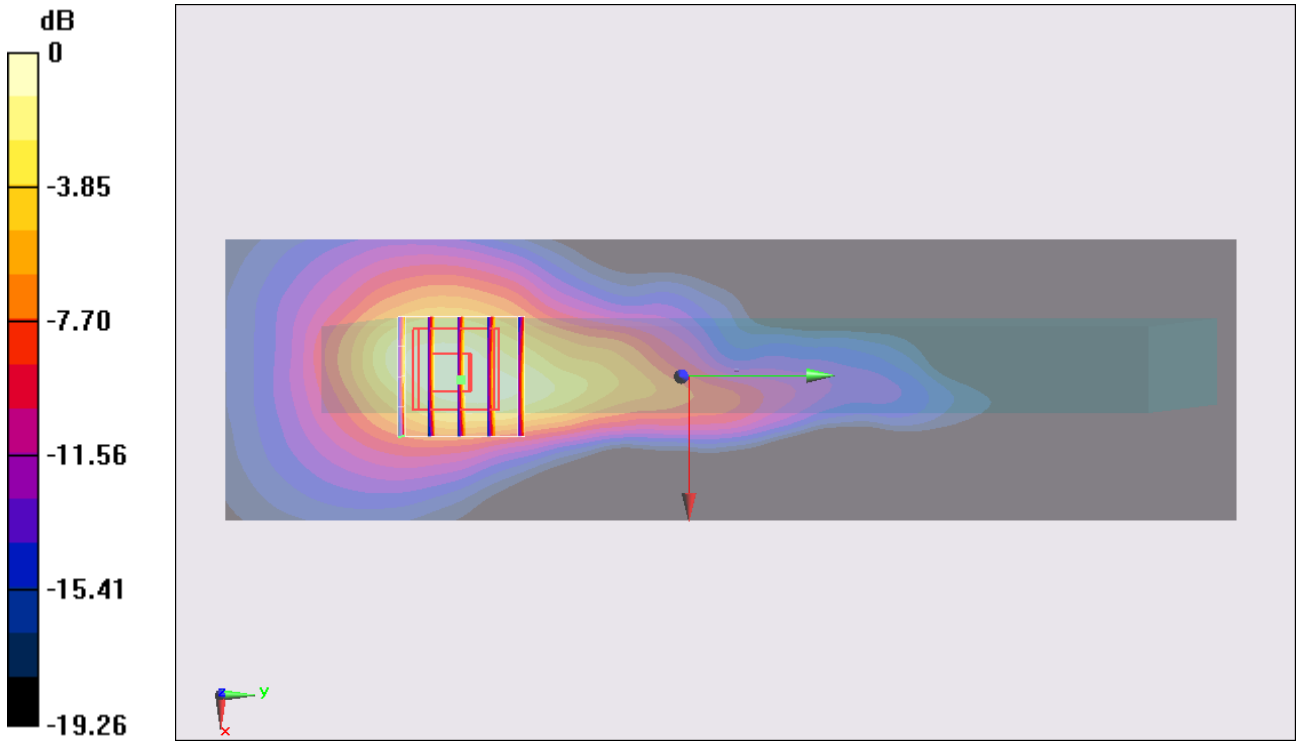

0 dB = 1.19 mW/g = 1.51 dB mW/g

#17_WCDMA II_RMC12.2K_Edge 4_0cm_Ch9262

DUT: 2N2103-02

Communication System: WCDMA; Frequency: 1852.4 MHz;Duty Cycle: 1:1
Medium: MSL_1900_121214 Medium parameters used : f = 1852.4 MHz; σ = 1.477 mho/m; ε_r = 54.295; ρ = 1000 kg/m^3
Ambient Temperature：22.5 ℃； Liquid Temperature：21.5 ℃

DASY5 Configuration:
- Probe: ET3DV6 - SN1787; ConvF(4.58, 4.58, 4.58); Calibrated: 2012/5/29;
- Sensor-Surface: 4mm (Mechanical Surface Detection)
- Electronics: DAE3 Sn495; Calibrated: 2012/4/23
- Phantom: ELI v5.0 Left; Type: QDOVA002AA; Serial: TP:1131
- Measurement SW: DASY52, Version 52.8 (3); SEMCAD X Version 14.6.5 (6469)

Configuration/Ch9262/Area Scan (51x181x1): Measurement grid: dx=15mm, dy=15mm
Maximum value of SAR (interpolated) = 1.18 mW/g

Configuration/Ch9262/Zoom Scan (5x5x7)/Cube 0: Measurement grid: dx=8mm, dy=8mm, dz=5mm
Reference Value = 4.018 V/m; Power Drift = 0.04 dB
Peak SAR (extrapolated) = 1.604 mW/g
SAR(1 g) = 1.01 mW/g; SAR(10 g) = 0.566 mW/g
Maximum value of SAR (measured) = 1.14 mW/g

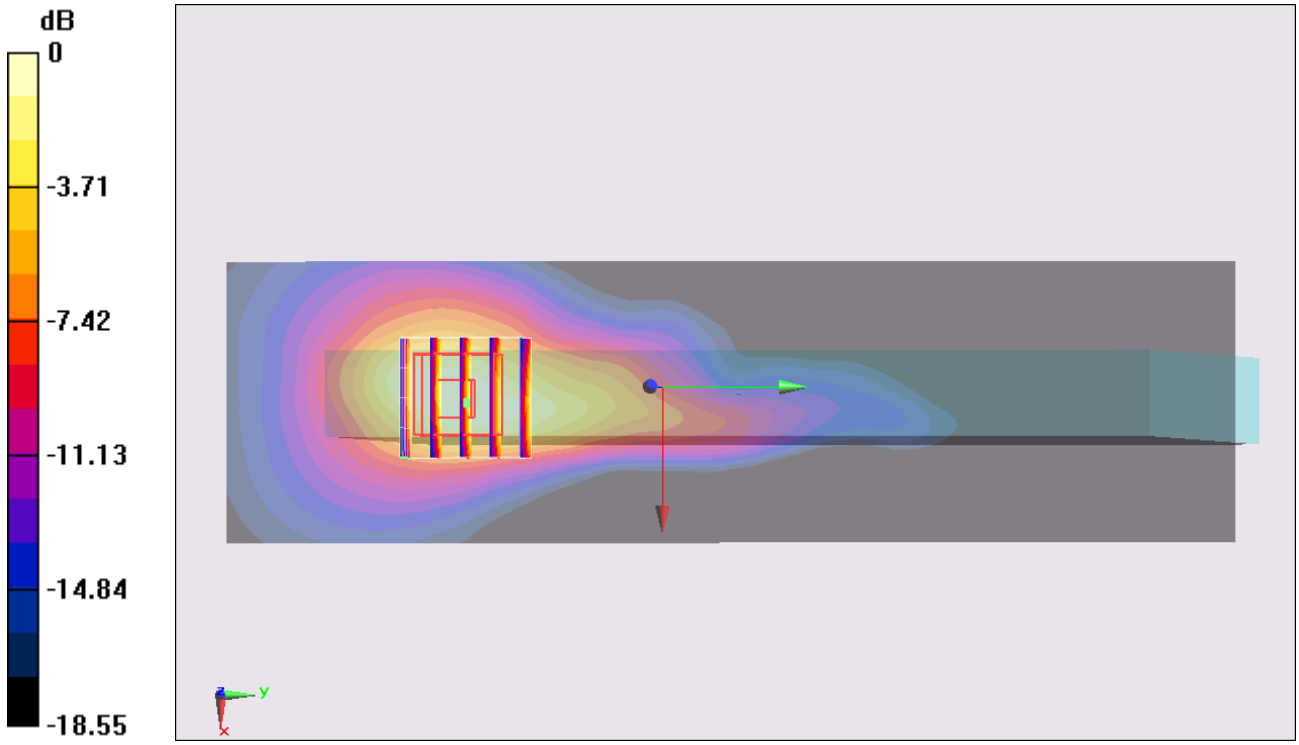

0 dB = 1.14 mW/g = 1.14 dB mW/g

#18_WCDMA II_RMC12.2K_Edge 4_0cm_Ch9538

DUT: 2N2103-02

Communication System: WCDMA; Frequency: 1907.6 MHz;Duty Cycle: 1:1
Medium: MSL_1900_121214 Medium parameters used: f = 1908 MHz; σ = 1.54 mho/m; ε_r = 54.116; ρ = 1000 kg/m^3
Ambient Temperature：22.5 ℃; Liquid Temperature：21.5 ℃

DASY5 Configuration:
- Probe: ET3DV6 - SN1787; ConvF(4.58, 4.58, 4.58); Calibrated: 2012/5/29;
- Sensor-Surface: 4mm (Mechanical Surface Detection)
- Electronics: DAE3 Sn495; Calibrated: 2012/4/23
- Phantom: ELI v5.0 Left; Type: QDOVA002AA; Serial: TP:1131
- Measurement SW: DASY52, Version 52.8 (3); SEMCAD X Version 14.6.5 (6469)

Configuration/Ch9538/Area Scan (51x181x1): Measurement grid: dx=15mm, dy=15mm
Maximum value of SAR (interpolated) = 1.23 mW/g

Configuration/Ch9538/Zoom Scan (5x5x7)/Cube 0: Measurement grid: dx=8mm, dy=8mm, dz=5mm
Reference Value = 4.109 V/m; Power Drift = 0.02 dB
Peak SAR (extrapolated) = 1.747 mW/g
SAR(1 g) = 1.07 mW/g; SAR(10 g) = 0.591 mW/g
Maximum value of SAR (measured) = 1.21 mW/g

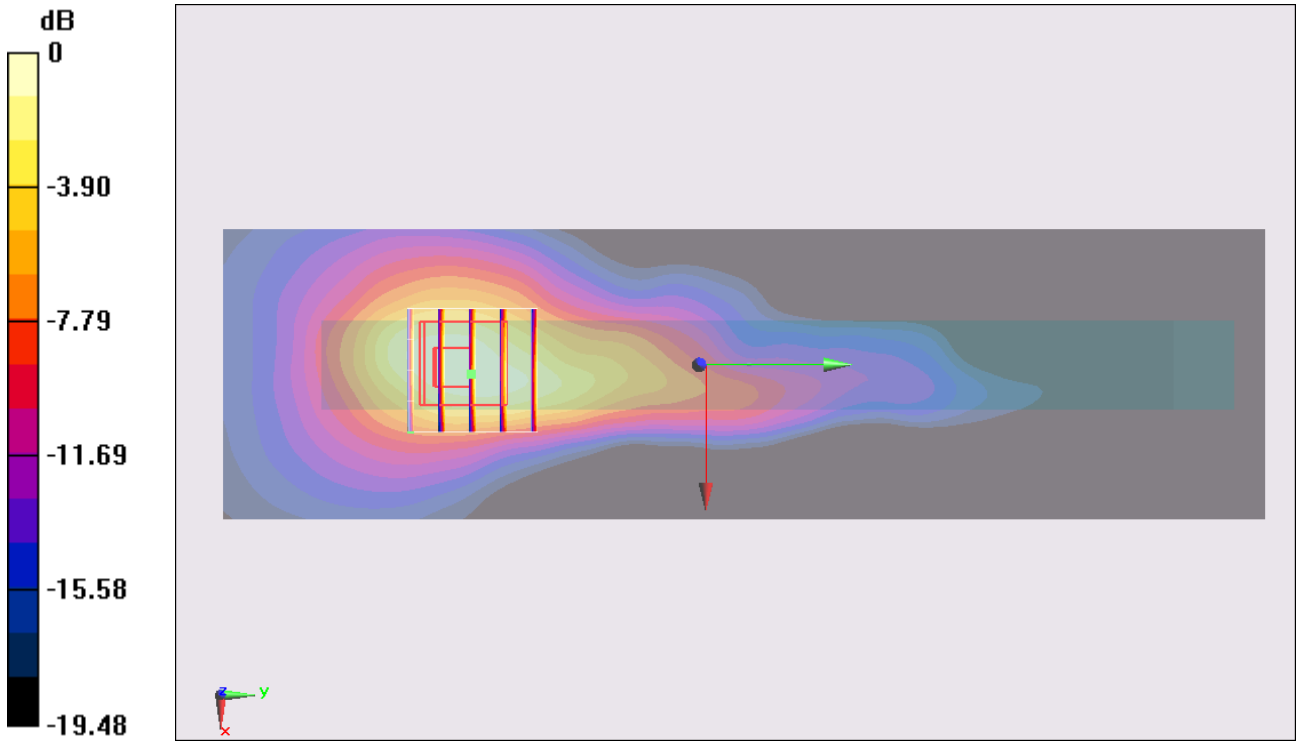

0 dB = 1.21 mW/g = 1.66 dB mW/g

#19_WCDMA II_HSDPA_Edge 4_0cm_Ch9538

DUT: 2N2103-02

Communication System: WCDMA; Frequency: 1907.6 MHz;Duty Cycle: 1:1
Medium: MSL_1900_121214 Medium parameters used: f = 1908 MHz; σ = 1.54 mho/m; ε_r = 54.116; ρ = 1000 kg/m^3
Ambient Temperature：22.5 ℃; Liquid Temperature：21.5 ℃

DASY5 Configuration:
- Probe: ET3DV6 - SN1787; ConvF(4.58, 4.58, 4.58); Calibrated: 2012/5/29;
- Sensor-Surface: 4mm (Mechanical Surface Detection)
- Electronics: DAE3 Sn495; Calibrated: 2012/4/23
- Phantom: ELI v5.0 Left; Type: QDOVA002AA; Serial: TP:1131
- Measurement SW: DASY52, Version 52.8 (3); SEMCAD X Version 14.6.5 (6469)

Configuration/Ch9538/Area Scan (41x181x1): Measurement grid: dx=15mm, dy=15mm
Maximum value of SAR (interpolated) = 1.35 mW/g

Configuration/Ch9538/Zoom Scan (5x5x7)/Cube 0: Measurement grid: dx=8mm, dy=8mm, dz=5mm
Reference Value = 0.206 V/m; Power Drift = -0.13 dB
Peak SAR (extrapolated) = 1.848 mW/g
SAR(1 g) = 1.11 mW/g; SAR(10 g) = 0.607 mW/g
Maximum value of SAR (measured) = 1.23 mW/g

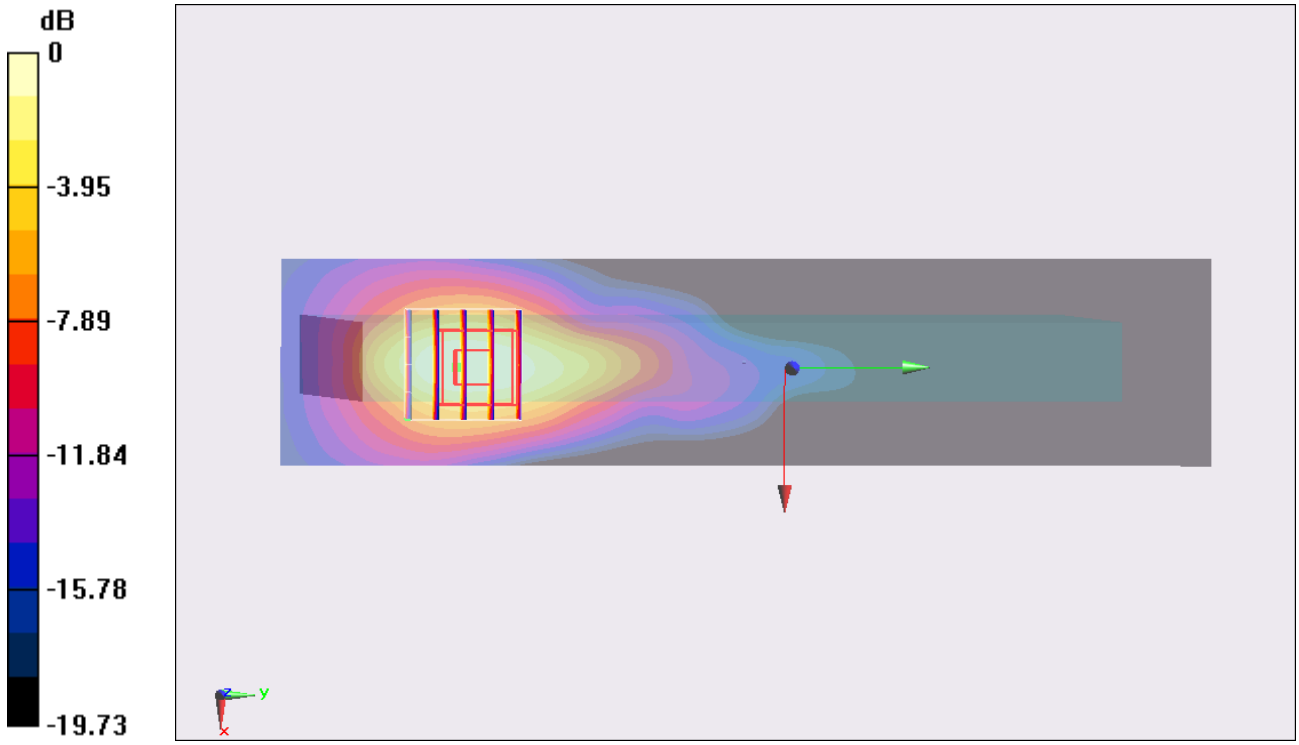

0 dB = 1.23 mW/g = 1.80 dB mW/g

#20_WCDMA II_HSDPA_Edge 4_0cm_Ch9262

DUT: 2N2103-02

Communication System: WCDMA; Frequency: 1852.4 MHz;Duty Cycle: 1:1
Medium: MSL_1900_121214 Medium parameters used : f = 1852.4 MHz; σ = 1.477 mho/m; ε_r = 54.295; ρ = 1000 kg/m^3
Ambient Temperature：22.5 ℃； Liquid Temperature：21.5 ℃

DASY5 Configuration:
- Probe: ET3DV6 - SN1787; ConvF(4.58, 4.58, 4.58); Calibrated: 2012/5/29;
- Sensor-Surface: 4mm (Mechanical Surface Detection)
- Electronics: DAE3 Sn495; Calibrated: 2012/4/23
- Phantom: ELI v5.0 Left; Type: QDOVA002AA; Serial: TP:1131
- Measurement SW: DASY52, Version 52.8 (3); SEMCAD X Version 14.6.5 (6469)

Configuration/Ch9262/Area Scan (41x181x1): Measurement grid: dx=15mm, dy=15mm
Maximum value of SAR (interpolated) = 1.31 mW/g

Configuration/Ch9262/Zoom Scan (5x5x7)/Cube 0: Measurement grid: dx=8mm, dy=8mm, dz=5mm
Reference Value = 0.185 V/m; Power Drift = 0.029 dB
Peak SAR (extrapolated) = 1.747 mW/g
SAR(1 g) = 1.11 mW/g; SAR(10 g) = 0.613 mW/g
Maximum value of SAR (measured) = 1.26 mW/g

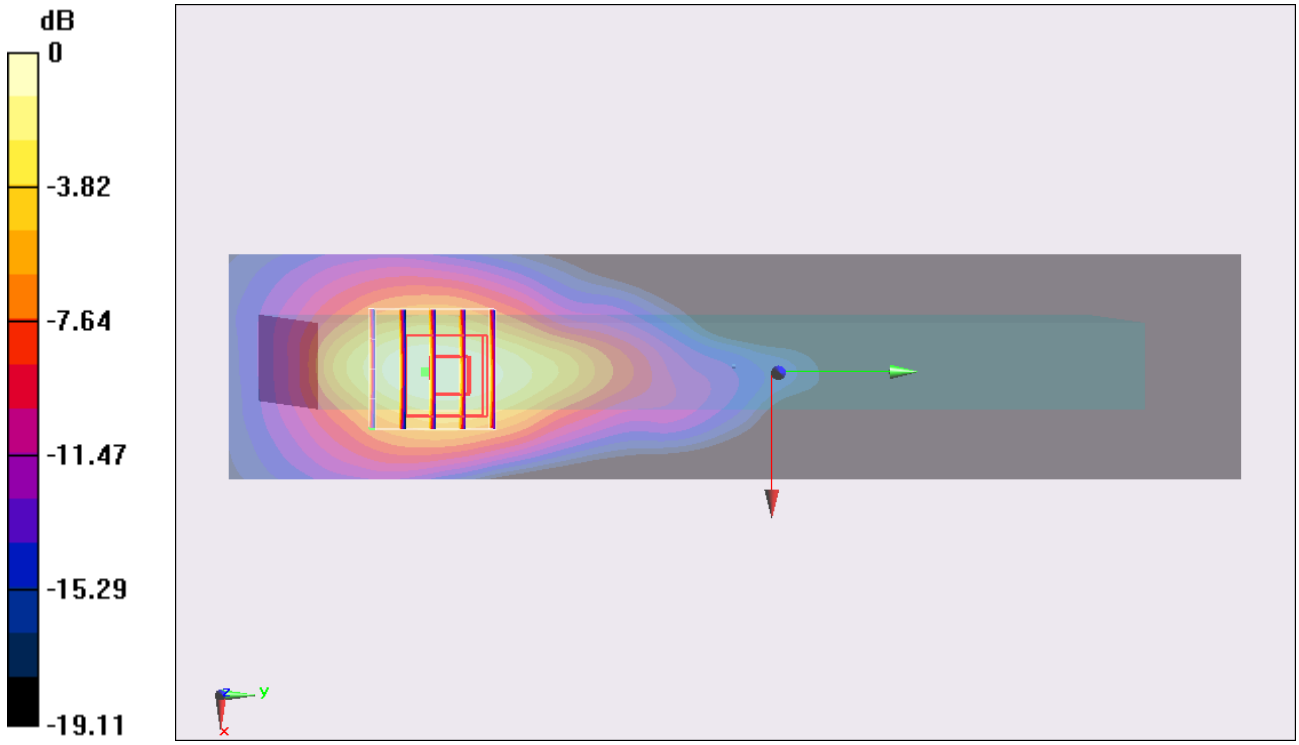

0 dB = 1.26 mW/g = 2.01 dB mW/g

#20_WCDMA II_HSDPA_Edge 4_0cm_Ch9262_2D

DUT: 2N2103-02

Communication System: WCDMA; Frequency: 1852.4 MHz;Duty Cycle: 1:1
Medium: MSL_1900_121214 Medium parameters used : f = 1852.4 MHz; σ = 1.477 mho/m; ε_r = 54.295; ρ = 1000 kg/m^3
Ambient Temperature：22.5 ℃； Liquid Temperature：21.5 ℃

DASY5 Configuration:
- Probe: ET3DV6 - SN1787; ConvF(4.58, 4.58, 4.58); Calibrated: 2012/5/29;
- Sensor-Surface: 4mm (Mechanical Surface Detection)
- Electronics: DAE3 Sn495; Calibrated: 2012/4/23
- Phantom: ELI v5.0 Left; Type: QDOVA002AA; Serial: TP:1131
- Measurement SW: DASY52, Version 52.8 (3); SEMCAD X Version 14.6.5 (6469)

Configuration/Ch9262/Area Scan (41x181x1): Measurement grid: dx=15mm, dy=15mm
Maximum value of SAR (interpolated) = 1.31 mW/g

Configuration/Ch9262/Zoom Scan (5x5x7)/Cube 0: Measurement grid: dx=8mm, dy=8mm, dz=5mm
Reference Value = 0.185 V/m; Power Drift = 0.029 dB
Peak SAR (extrapolated) = 1.747 mW/g
SAR(1 g) = 1.11 mW/g; SAR(10 g) = 0.613 mW/g
Maximum value of SAR (measured) = 1.26 mW/g

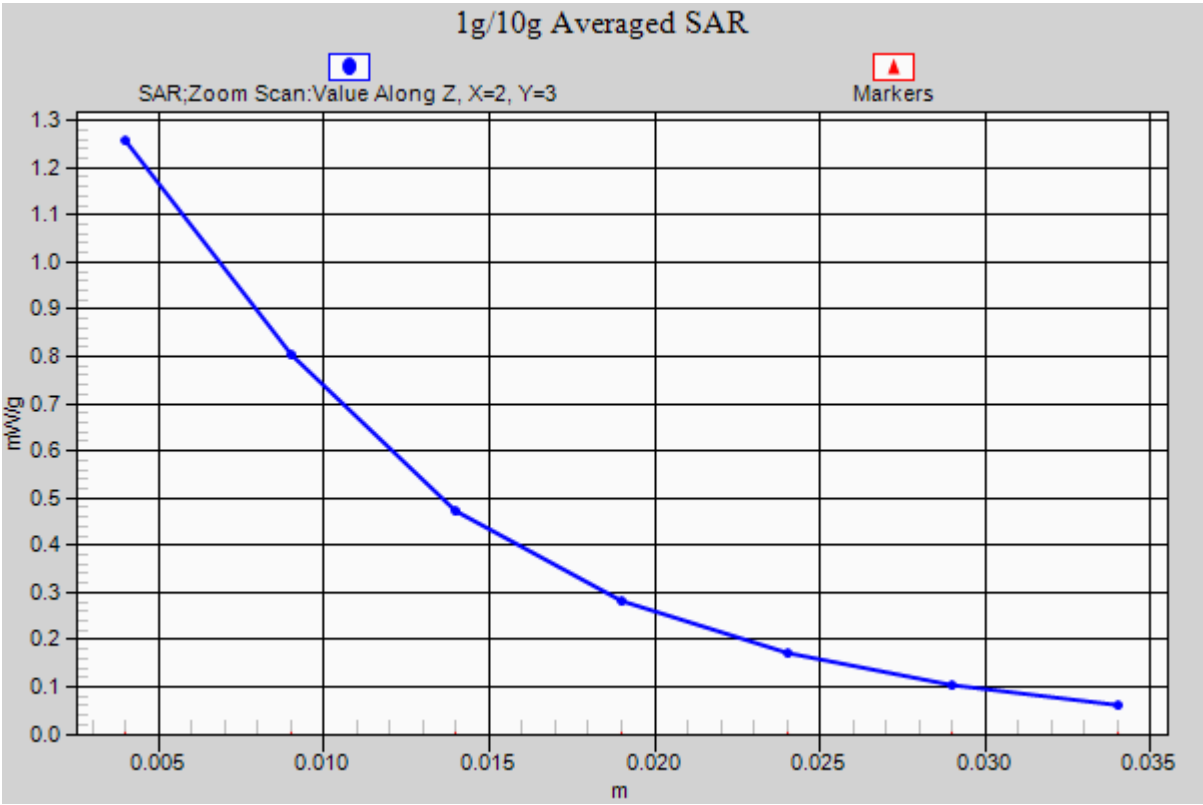

#62_WCDMA II_HSDPA_Edge 4_0cm_Ch9262_Repeat

DUT: 2N2103-02

Communication System: WCDMA; Frequency: 1852.4 MHz;Duty Cycle: 1:1
Medium: MSL_1900_121214 Medium parameters used : f = 1852.4 MHz; σ = 1.477 mho/m; ε_r = 54.295; ρ = 1000 kg/m^3
Ambient Temperature：22.5 ℃； Liquid Temperature：21.5 ℃

DASY5 Configuration:
- Probe: ET3DV6 - SN1787; ConvF(4.58, 4.58, 4.58); Calibrated: 2012/5/29;
- Sensor-Surface: 4mm (Mechanical Surface Detection)
- Electronics: DAE3 Sn495; Calibrated: 2012/4/23
- Phantom: ELI v5.0 Left; Type: QDOVA002AA; Serial: TP:1131
- Measurement SW: DASY52, Version 52.8 (3); SEMCAD X Version 14.6.5 (6469)

Configuration/Ch9262/Area Scan (41x181x1): Measurement grid: dx=15mm, dy=15mm
Maximum value of SAR (interpolated) = 1.23 mW/g

Configuration/Ch9262/Zoom Scan (5x5x7)/Cube 0: Measurement grid: dx=8mm, dy=8mm, dz=5mm
Reference Value = 0.302 V/m; Power Drift = -0.128 dB
Peak SAR (extrapolated) = 1.712 mW/g
SAR(1 g) = 1.09 mW/g; SAR(10 g) = 0.606 mW/g
Maximum value of SAR (measured) = 1.16 mW/g

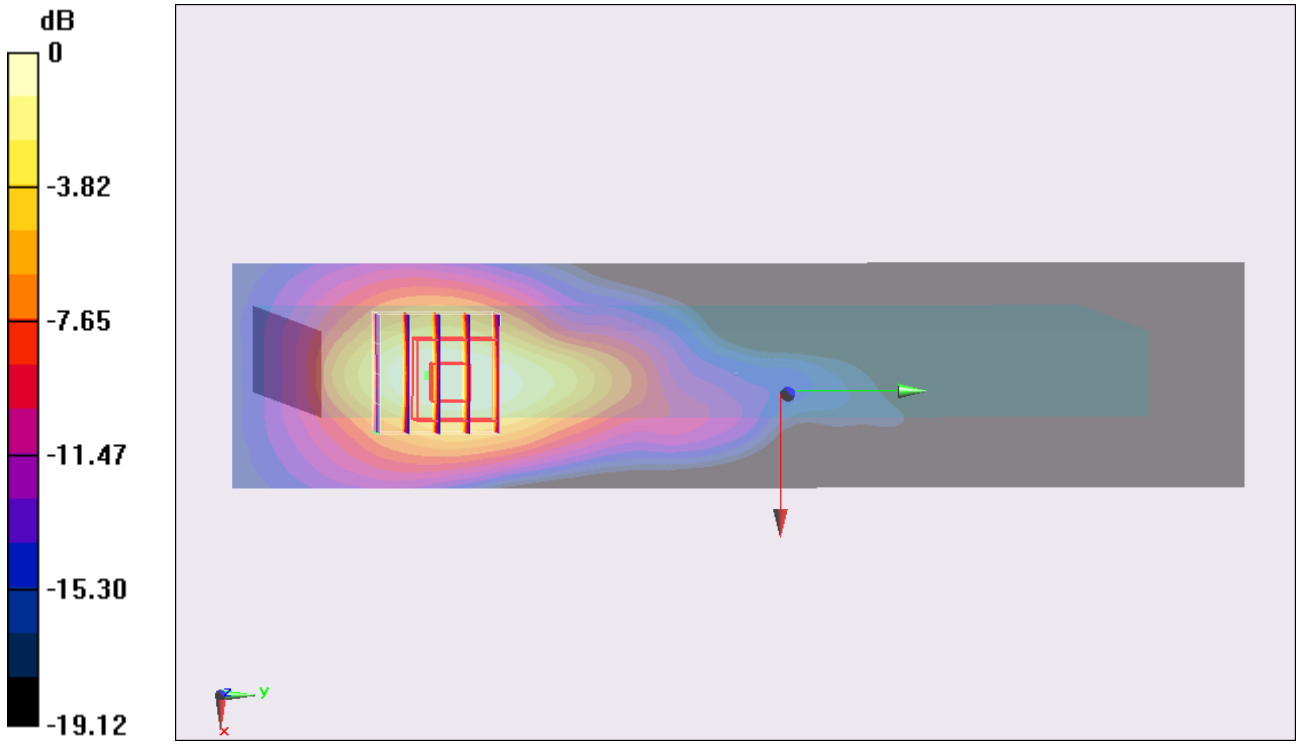

0 dB = 1.16 mW/g = 1.29 dB mW/g

#21_WCDMA II_HSDPA_Edge 4_0cm_Ch9400

DUT: 2N2103-02

Communication System: WCDMA; Frequency: 1880 MHz;Duty Cycle: 1:1
Medium: MSL_1900_121214 Medium parameters used: f = 1880 MHz; σ = 1.51 mho/m; ε_r = 54.235; ρ = 1000 kg/m^3
Ambient Temperature：22.5 ℃； Liquid Temperature：21.5 ℃

DASY5 Configuration:
- Probe: ET3DV6 - SN1787; ConvF(4.58, 4.58, 4.58); Calibrated: 2012/5/29;
- Sensor-Surface: 4mm (Mechanical Surface Detection)
- Electronics: DAE3 Sn495; Calibrated: 2012/4/23
- Phantom: ELI v5.0 Left; Type: QDOVA002AA; Serial: TP:1131
- Measurement SW: DASY52, Version 52.8 (3); SEMCAD X Version 14.6.5 (6469)

Configuration/Ch9400/Area Scan (41x181x1): Measurement grid: dx=15mm, dy=15mm
Maximum value of SAR (interpolated) = 1.39 mW/g

Configuration/Ch9400/Zoom Scan (5x5x7)/Cube 0: Measurement grid: dx=8mm, dy=8mm, dz=5mm
Reference Value = 0.267 V/m; Power Drift = 0.11 dB
Peak SAR (extrapolated) = 1.463 mW/g
SAR(1 g) = 0.958 mW/g; SAR(10 g) = 0.518 mW/g
Maximum value of SAR (measured) = 0.992 mW/g

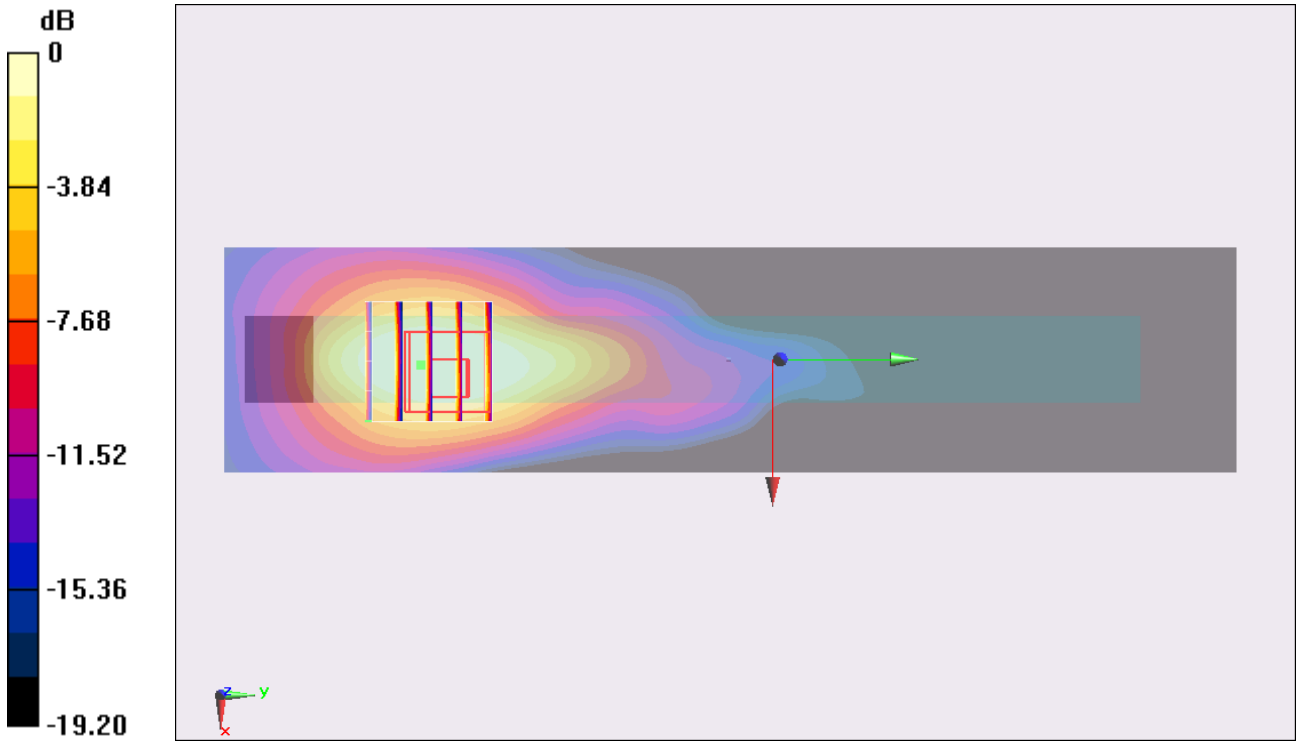

0 dB = 0.992 mW/g = -0.07 dB mW/g

#22_WCDMA II_HSUPA_Edge 4_0cm_Ch9538

DUT: 2N2103-02

Communication System: WCDMA; Frequency: 1907.6 MHz;Duty Cycle: 1:1
Medium: MSL_1900_121214 Medium parameters used: f = 1908 MHz; σ = 1.54 mho/m; ε_r = 54.116; ρ = 1000 kg/m^3
Ambient Temperature：22.5 ℃; Liquid Temperature：21.5 ℃

DASY5 Configuration:
- Probe: ET3DV6 - SN1787; ConvF(4.58, 4.58, 4.58); Calibrated: 2012/5/29;
- Sensor-Surface: 4mm (Mechanical Surface Detection)
- Electronics: DAE3 Sn495; Calibrated: 2012/4/23
- Phantom: ELI v5.0 Left; Type: QDOVA002AA; Serial: TP:1131
- Measurement SW: DASY52, Version 52.8 (3); SEMCAD X Version 14.6.5 (6469)

Configuration/Ch9538/Area Scan (41x181x1): Measurement grid: dx=15mm, dy=15mm
Maximum value of SAR (interpolated) = 1.01 mW/g

Configuration/Ch9538/Zoom Scan (5x5x7)/Cube 0: Measurement grid: dx=8mm, dy=8mm, dz=5mm
Reference Value = 0.322 V/m; Power Drift = -0.025 dB
Peak SAR (extrapolated) = 1.450 mW/g
SAR(1 g) = 0.864 mW/g; SAR(10 g) = 0.474 mW/g
Maximum value of SAR (measured) = 0.941 mW/g

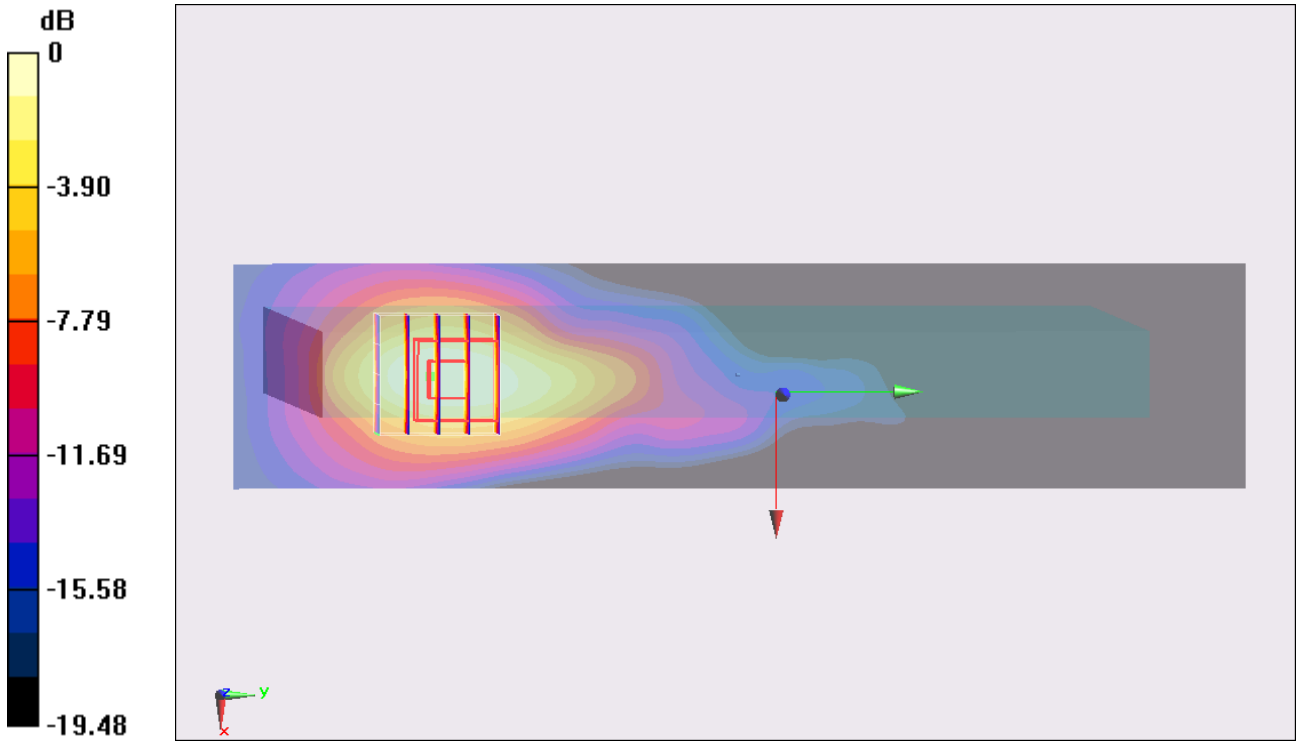

0 dB = 0.941 mW/g = -0.53 dB mW/g

#23_WCDMA II_HSUPA_Edge 4_0cm_Ch9262

DUT: 2N2103-02

Communication System: WCDMA; Frequency: 1852.4 MHz;Duty Cycle: 1:1
Medium: MSL_1900_121214 Medium parameters used : f = 1852.4 MHz; σ = 1.477 mho/m; ε_r = 54.295; ρ = 1000 kg/m^3
Ambient Temperature：22.5 ℃； Liquid Temperature：21.5 ℃

DASY5 Configuration:
- Probe: ET3DV6 - SN1787; ConvF(4.58, 4.58, 4.58); Calibrated: 2012/5/29;
- Sensor-Surface: 4mm (Mechanical Surface Detection)
- Electronics: DAE3 Sn495; Calibrated: 2012/4/23
- Phantom: ELI v5.0 Left; Type: QDOVA002AA; Serial: TP:1131
- Measurement SW: DASY52, Version 52.8 (3); SEMCAD X Version 14.6.5 (6469)

Configuration/Ch9262/Area Scan (41x181x1): Measurement grid: dx=15mm, dy=15mm
Maximum value of SAR (interpolated) = 0.944 mW/g

Configuration/Ch9262/Zoom Scan (5x5x7)/Cube 0: Measurement grid: dx=8mm, dy=8mm, dz=5mm
Reference Value = 0.401 V/m; Power Drift = -0.04 dB
Peak SAR (extrapolated) = 1.322 mW/g
SAR(1 g) = 0.833 mW/g; SAR(10 g) = 0.463 mW/g
Maximum value of SAR (measured) = 0.881 mW/g

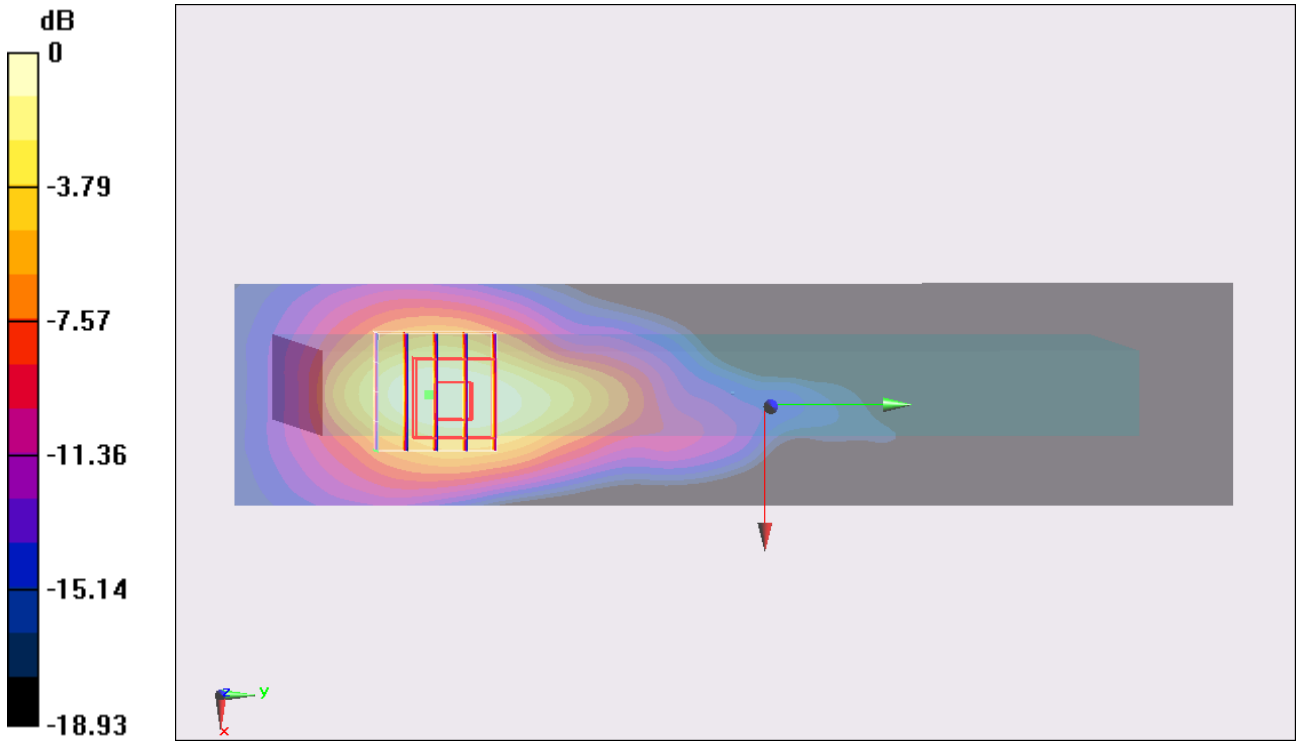

0 dB = 0.881 mW/g = -1.10 dB mW/g

#24_WCDMA II_HSUPA_Edge 4_0cm_Ch9400

DUT: 2N2103-02

Communication System: WCDMA; Frequency: 1880 MHz;Duty Cycle: 1:1
Medium: MSL_1900_121214 Medium parameters used: f = 1880 MHz; σ = 1.51 mho/m; ε_r = 54.235; ρ = 1000 kg/m^3
Ambient Temperature：22.5 ℃； Liquid Temperature：21.5 ℃

DASY5 Configuration:
- Probe: ET3DV6 - SN1787; ConvF(4.58, 4.58, 4.58); Calibrated: 2012/5/29;
- Sensor-Surface: 4mm (Mechanical Surface Detection)
- Electronics: DAE3 Sn495; Calibrated: 2012/4/23
- Phantom: ELI v5.0 Left; Type: QDOVA002AA; Serial: TP:1131
- Measurement SW: DASY52, Version 52.8 (3); SEMCAD X Version 14.6.5 (6469)

Configuration/Ch9400/Area Scan (41x181x1): Measurement grid: dx=15mm, dy=15mm
Maximum value of SAR (interpolated) = 1.00 mW/g

Configuration/Ch9400/Zoom Scan (5x5x7)/Cube 0: Measurement grid: dx=8mm, dy=8mm, dz=5mm
Reference Value = 0 V/m; Power Drift = 0.001 dB
Peak SAR (extrapolated) = 1.428 mW/g
SAR(1 g) = 0.874 mW/g; SAR(10 g) = 0.484 mW/g
Maximum value of SAR (measured) = 0.941 mW/g

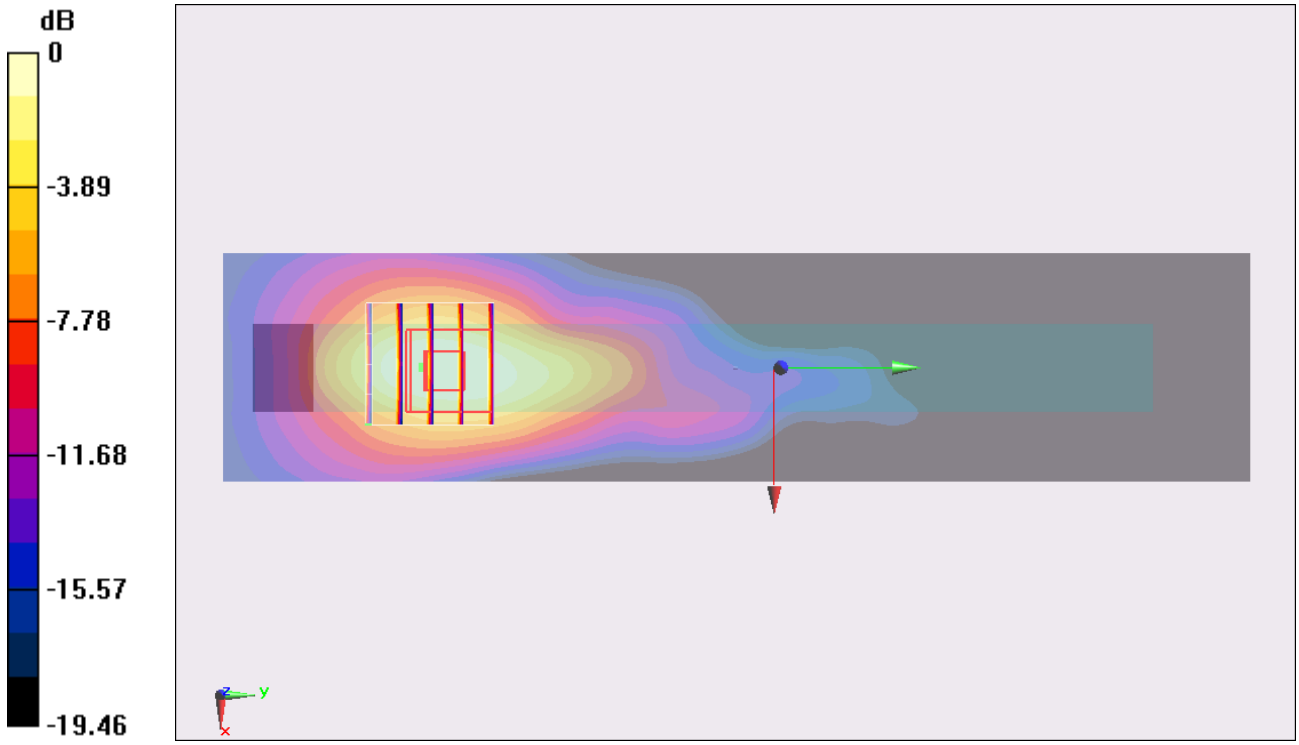

0 dB = 0.941 mW/g = -0.53 dB mW/g

#25_WCDMA II_RMC12.2K_Bottom_0cm_Ch9400

DUT: 2N2103-02

Communication System: WCDMA; Frequency: 1880 MHz;Duty Cycle: 1:1
Medium: MSL_1900_121214 Medium parameters used: f = 1880 MHz; σ = 1.51 mho/m; ε_r = 54.235; ρ = 1000 kg/m^3
Ambient Temperature：22.5 ℃; Liquid Temperature：21.5 ℃

DASY5 Configuration:
- Probe: ET3DV6 - SN1787; ConvF(4.58, 4.58, 4.58); Calibrated: 2012/5/29;
- Sensor-Surface: 4mm (Mechanical Surface Detection)
- Electronics: DAE3 Sn495; Calibrated: 2012/4/23
- Phantom: ELI v5.0 Left; Type: QDOVA002AA; Serial: TP:1131
- Measurement SW: DASY52, Version 52.8 (3); SEMCAD X Version 14.6.5 (6469)

Configuration/Ch9400/Area Scan (101x91x1): Measurement grid: dx=15mm, dy=15mm
Maximum value of SAR (interpolated) = 0.924 mW/g

Configuration/Ch9400/Zoom Scan (5x5x7)/Cube 0: Measurement grid: dx=8mm, dy=8mm, dz=5mm
Reference Value = 0.310 V/m; Power Drift = 0.063 dB
Peak SAR (extrapolated) = 1.444 mW/g
SAR(1 g) = 0.821 mW/g; SAR(10 g) = 0.472 mW/g
Maximum value of SAR (measured) = 0.868 mW/g

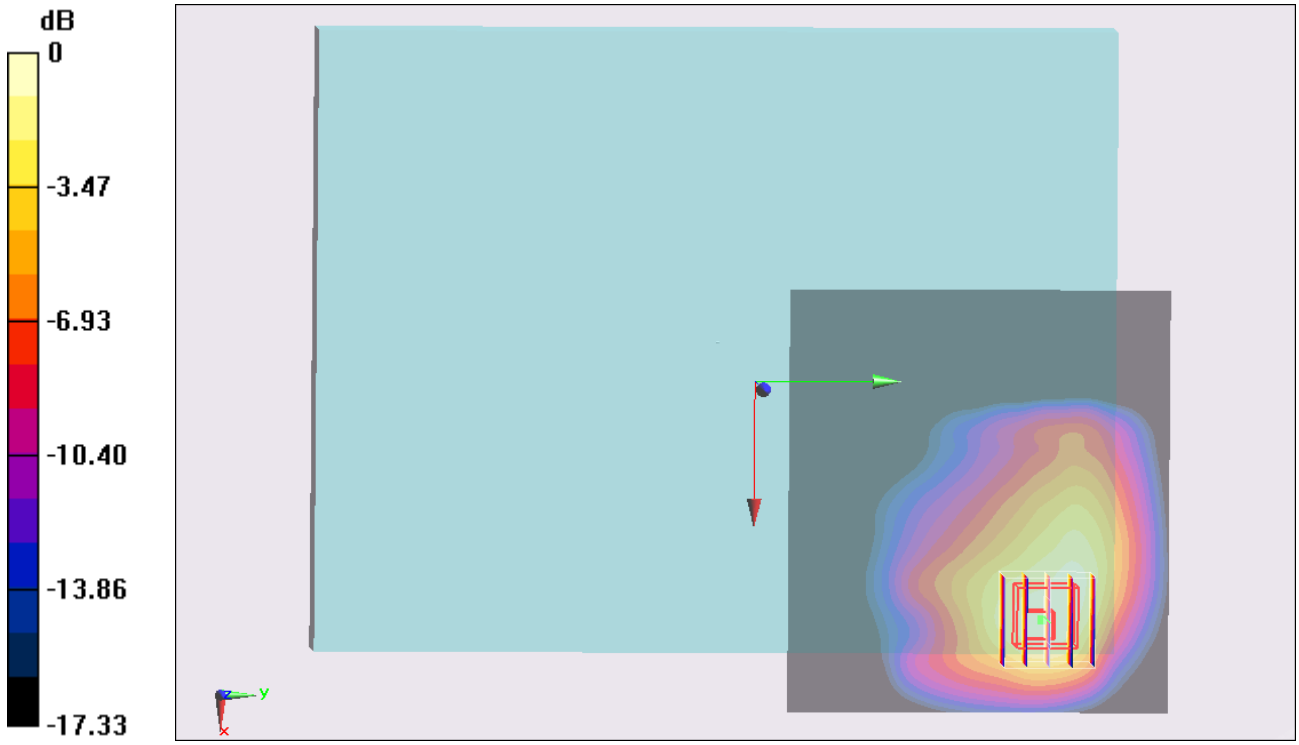

0 dB = 0.868 mW/g = -1.23 dB mW/g

#26_WCDMA II_RMC12.2K_Bottom_0cm_Ch9262

DUT: 2N2103-02

Communication System: WCDMA; Frequency: 1852.4 MHz;Duty Cycle: 1:1
Medium: MSL_1900_121214 Medium parameters used: f = 1852.4 MHz; σ = 1.477 mho/m; ε_r = 54.295; ρ = 1000 kg/m^3
Ambient Temperature：22.5 ℃； Liquid Temperature：21.5 ℃

DASY5 Configuration:
- Probe: ET3DV6 - SN1787; ConvF(4.58, 4.58, 4.58); Calibrated: 2012/5/29;
- Sensor-Surface: 4mm (Mechanical Surface Detection)
- Electronics: DAE3 Sn495; Calibrated: 2012/4/23
- Phantom: ELI v5.0 Left; Type: QDOVA002AA; Serial: TP:1131
- Measurement SW: DASY52, Version 52.8 (3); SEMCAD X Version 14.6.5 (6469)

Configuration/Ch9262/Area Scan (101x91x1): Measurement grid: dx=15mm, dy=15mm
Maximum value of SAR (interpolated) = 0.901 mW/g

Configuration/Ch9262/Zoom Scan (5x5x7)/Cube 0: Measurement grid: dx=8mm, dy=8mm, dz=5mm
Reference Value = 25.690 V/m; Power Drift = 0.04 dB
Peak SAR (extrapolated) = 1.729 mW/g
SAR(1 g) = 0.852 mW/g; SAR(10 g) = 0.410 mW/g
Maximum value of SAR (measured) = 0.815 mW/g

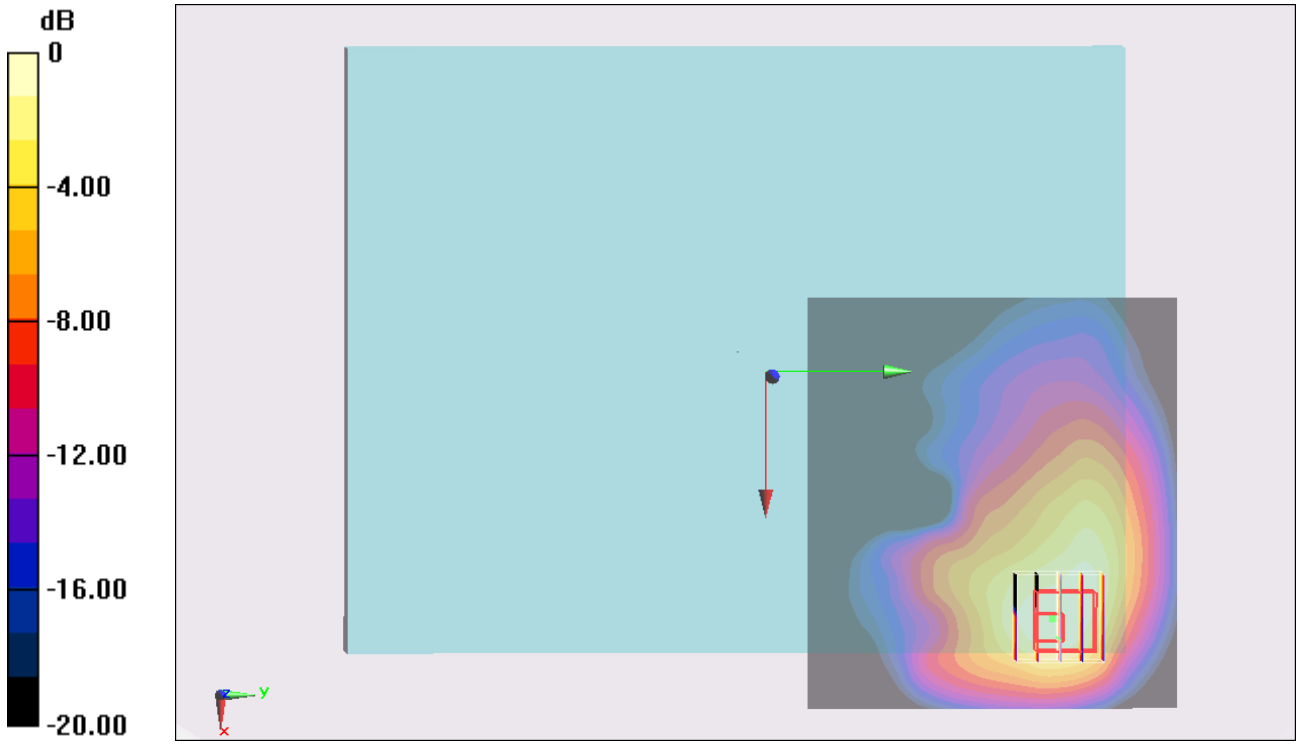

0 dB = 0.815 mW/g = -1.78 dB mW/g

#27_WCDMA II_RMC12.2K_Bottom_0cm_Ch9538

DUT: 2N2103-02

Communication System: WCDMA; Frequency: 1907.6 MHz;Duty Cycle: 1:1
Medium: MSL_1900_121214 Medium parameters used: f = 1908 MHz; σ = 1.54 mho/m; ε_r = 54.116; ρ = 1000 kg/m^3
Ambient Temperature：22.5 ℃; Liquid Temperature：21.5 ℃

DASY5 Configuration:
- Probe: ET3DV6 - SN1787; ConvF(4.58, 4.58, 4.58); Calibrated: 2012/5/29;
- Sensor-Surface: 4mm (Mechanical Surface Detection)
- Electronics: DAE3 Sn495; Calibrated: 2012/4/23
- Phantom: ELI v5.0 Left; Type: QDOVA002AA; Serial: TP:1131
- Measurement SW: DASY52, Version 52.8 (3); SEMCAD X Version 14.6.5 (6469)

Configuration/Ch9538/Area Scan (101x91x1): Measurement grid: dx=15mm, dy=15mm
Maximum value of SAR (interpolated) = 0.900 mW/g

Configuration/Ch9538/Zoom Scan (5x5x7)/Cube 0: Measurement grid: dx=8mm, dy=8mm, dz=5mm
Reference Value = 25.476 V/m; Power Drift = 0.04 dB
Peak SAR (extrapolated) = 1.415 mW/g
SAR(1 g) = 0.798 mW/g; SAR(10 g) = 0.443 mW/g
Maximum value of SAR (measured) = 0.869 mW/g

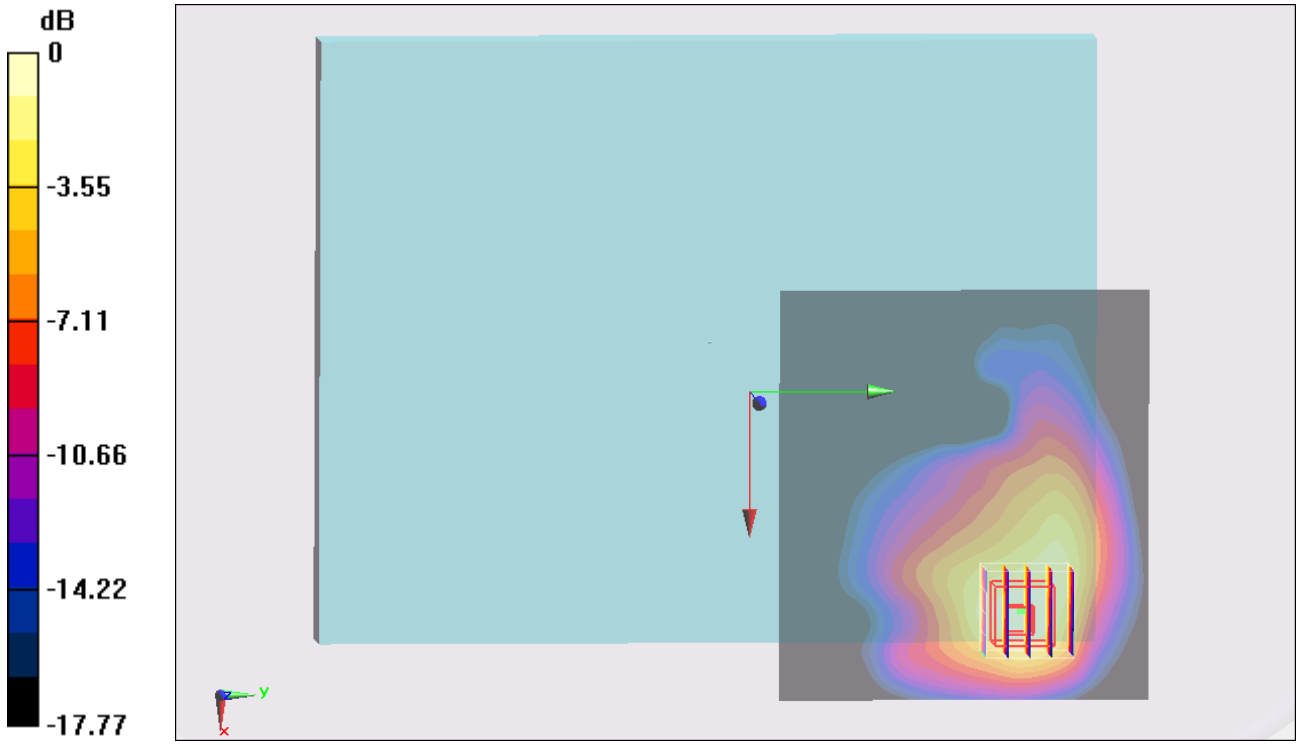

0 dB = 0.869 mW/g = -1.22 dB mW/g

#28_WCDMA II_RMC12.2K_Bottom Face_1cm_Ch9400

DUT: 2N2103-02

Communication System: WCDMA; Frequency: 1880 MHz;Duty Cycle: 1:1
Medium: MSL_1900_121214 Medium parameters used: f = 1880 MHz; σ = 1.51 mho/m; ε_r = 54.235; ρ = 1000 kg/m^3
Ambient Temperature：22.5 ℃； Liquid Temperature：21.5 ℃

DASY5 Configuration:
- Probe: ET3DV6 - SN1787; ConvF(4.58, 4.58, 4.58); Calibrated: 2012/5/29;
- Sensor-Surface: 4mm (Mechanical Surface Detection)
- Electronics: DAE3 Sn495; Calibrated: 2012/4/23
- Phantom: ELI v5.0 Left; Type: QDOVA002AA; Serial: TP:1131
- Measurement SW: DASY52, Version 52.8 (3); SEMCAD X Version 14.6.5 (6469)

Configuration/Ch9400/Area Scan (101x91x1): Measurement grid: dx=15mm, dy=15mm
Maximum value of SAR (interpolated) = 0.487 mW/g

Configuration/Ch9400/Zoom Scan (5x5x7)/Cube 0: Measurement grid: dx=8mm, dy=8mm, dz=5mm
Reference Value = 19.440 V/m; Power Drift = -0.07 dB
Peak SAR (extrapolated) = 0.604 mW/g
SAR(1 g) = 0.441 mW/g; SAR(10 g) = 0.290 mW/g
Maximum value of SAR (measured) = 0.470 mW/g

Configuration/Ch9400/Zoom Scan (5x5x7)/Cube 1: Measurement grid: dx=8mm, dy=8mm, dz=5mm
Reference Value = 19.440 V/m; Power Drift = -0.07 dB
Peak SAR (extrapolated) = 0.590 mW/g
SAR(1 g) = 0.387 mW/g; SAR(10 g) = 0.240 mW/g
Maximum value of SAR (measured) = 0.425 mW/g

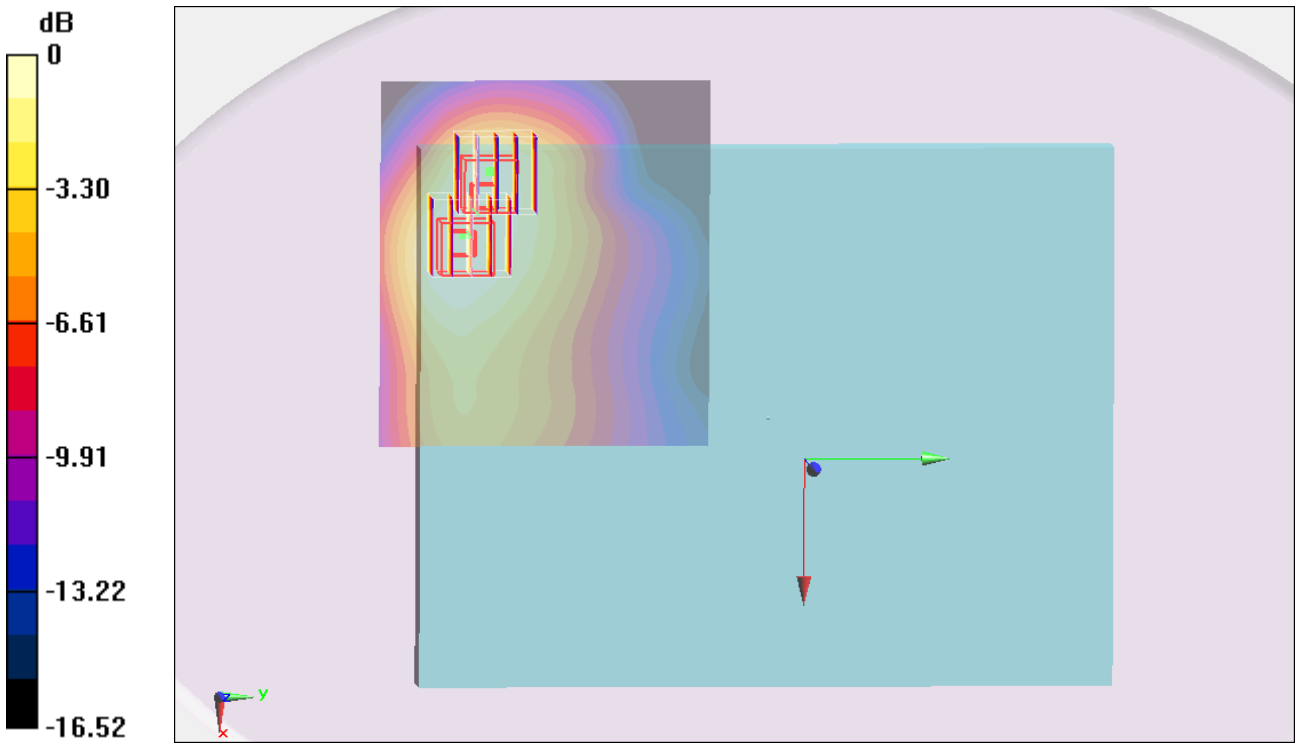

0 dB = 0.425 mW/g = -7.43 dB mW/g

Appendix C. DASY Calibration Certificate

The DASY calibration certificates are shown as follows.