DATE	SYM	REVISION RECORD	DR	CK
		SEE PAGE 1		

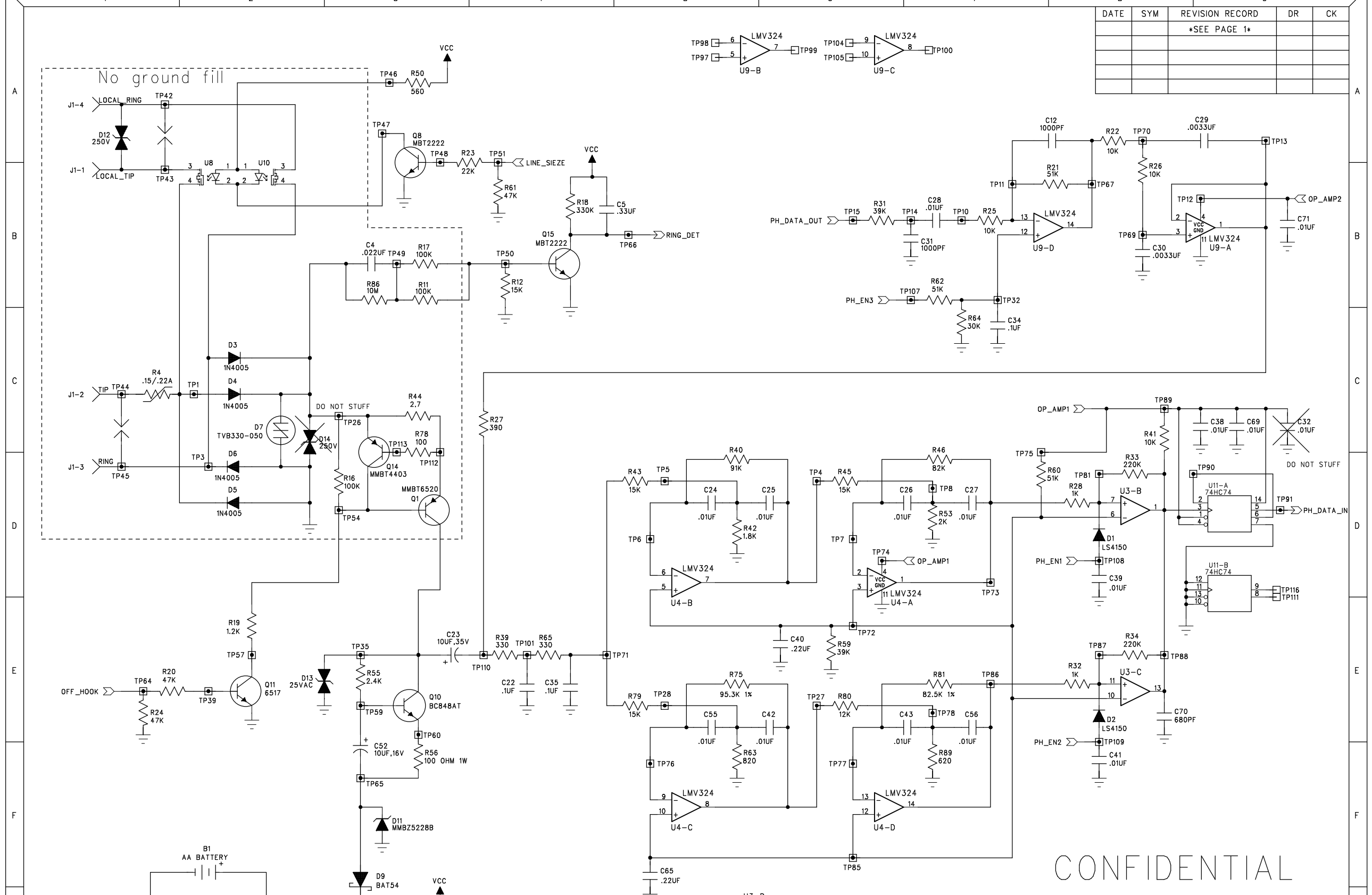

CONFIDENTIAL

DRAWN	INTERACTIVE TECHNOLOGIES INC. 2266 NORTH 2ND ST. NORTH ST. PAUL, MN. 55109	
CHECKED		
APPROVED		

DECIMAL TOL.	FINAL ASSEMBLY NUMBER	SCALE	DRAWN BY
FRACT. TOL.	TITLE Telephone Interface Module		
ANGULAR TOL.	DATE 10/3/2	SIZE B	PART NUMBER (pg 2 of 2) 52-786	REV. E