DATE	SYM	REVISION RECORD	DR	CK

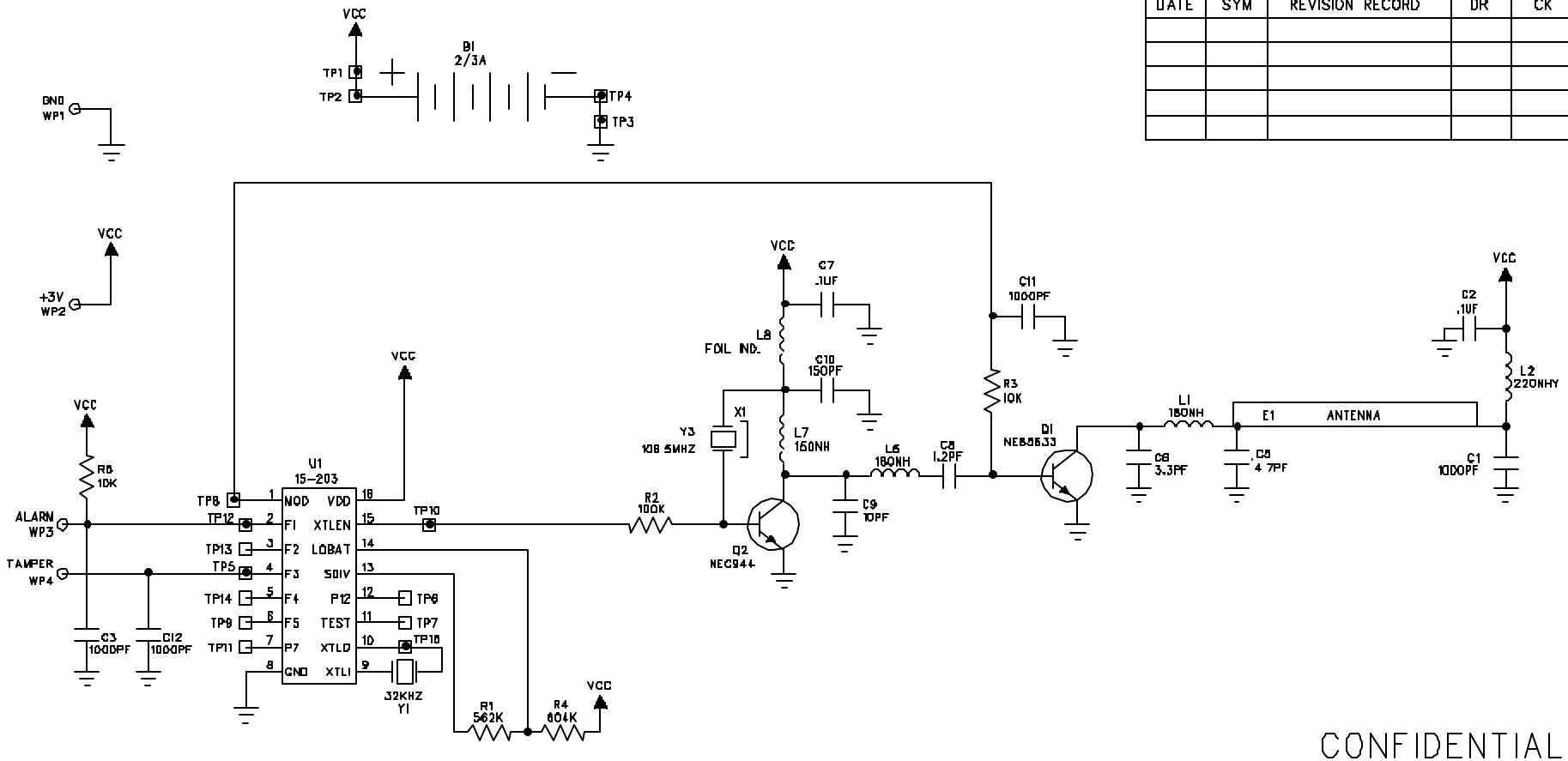

CONFIDENTIAL

DRAWN	INTERACTIVE TECHNOLOGIES INC. 2268 NORTH 2ND ST. NORTH ST. PAUL, MN. 55109			
CHECKED	DECIMAL TOL	FINAL ASSEMBLY NUMBER 60-	SCALE	DRAWN BY
APPROVED	FRACT TOL	TITLE SENTROLITI XTAL PIR XMTR		
	ANGULAR TOL.	DATE 2/22/00	SIZE B	PART NUMBER 52-779-95	REV. A

REV.	ECO#	DATE	CHANGED BY

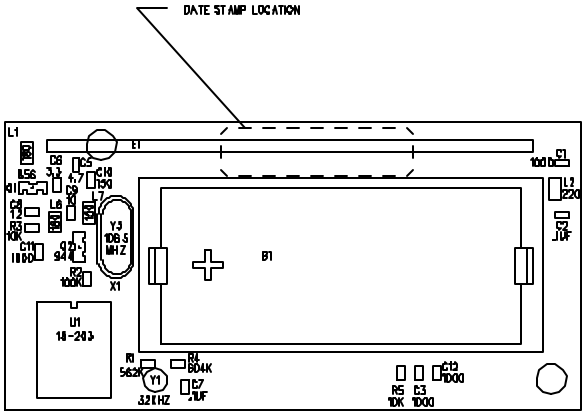

NOTES:

1) MAX. FINISHED LEAD LENGTH OF .062".
2) ALL CAP VALUES ARE IN MICRO FARADS AND INDUCTORS IN NANO HENRYS UNLESS OTHERWISE NOTED.
3) COMPONENTS TO BE MOUNTED AS FLUSH AS POSSIBLE TO BOARD.
4) 58-779 CONTAINS EVERYTHING SHOWN.

CONFIDENTIAL

DRAWN BY			
CHECKED BY			
APPROVED BY			

INTERACTIVE TECHNOLOGIES INC.

DEC. TOL.	TOP LEVEL ASSY. #	SCALE	DRAWN BY
N/A	60-	2:1	[illegible]
FRAC. TOL.	TITLE		
N/A	AP SERIES XTAL PIR TOP SIDE PPD		
ANG. TOL.	DATE	SIZE	PART NUMBER	REV.
N/A	2/18/00	B	57-779-95	A