DATE	SYM	REVISION RECORD	DR	CK

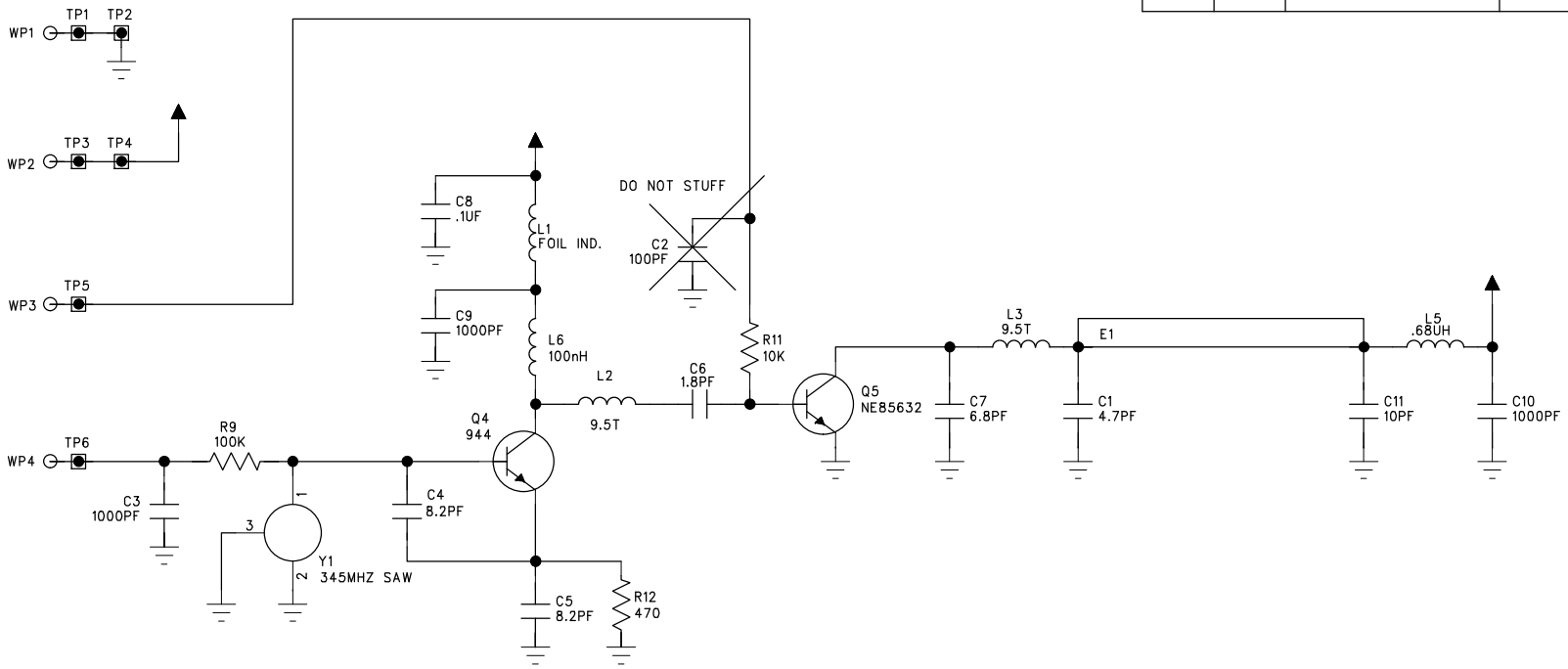

✳		✳	DRAWN
			CHECKED
			APPROVED

INTERACTIVE TECHNOLOGIES INC.
2266 NORTH 2ND ST. NORTH ST. PAUL, MN. 55109

DECIMAL TOL.	FINAL ASSEMBLY NUMBER	SCALE	DRAWN BY
	60–	N/A	R
FRACT. TOL.	TITLE SAW SMOKE		
ANGULAR TOL.	DATE 7/7/00	SIZE	PART NUMBER 52–778–345	REV. A

REV.	ECO#	DATE	CHANGED BY

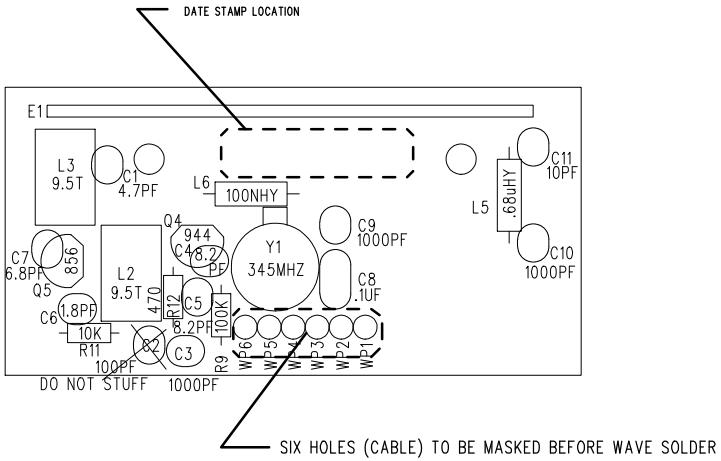

NOTES:

1) MAX. FINISHED LEAD LENGTH OF .062".
2) DO NOT CRIMP OR BEND LEADS OF Y1.
3) COMPONENTS TO BE MOUNTED AS FLUSH AS POSSIBLE TO BOARD.
4) 56-778 CONTAINS EVERYTHING SHOWN.

CONFIDENTIAL

DRAWN BY		
CHECKED BY		
APPROVED BY		

INTERACTIVE TECHNOLOGIES INC.

DEC. TOL.	TOP LEVEL ASSY. #	SCALE	DRAWN BY
N/A	60-	2:1	R

FRAC. TOL.	TITLE	
N/A	SAW SMOKE	TOP SIDE PPD

ANG. TOL.	DATE	SIZE	PART NUMBER	REV.
N/A	6/28/00	B	57- 778-345	A