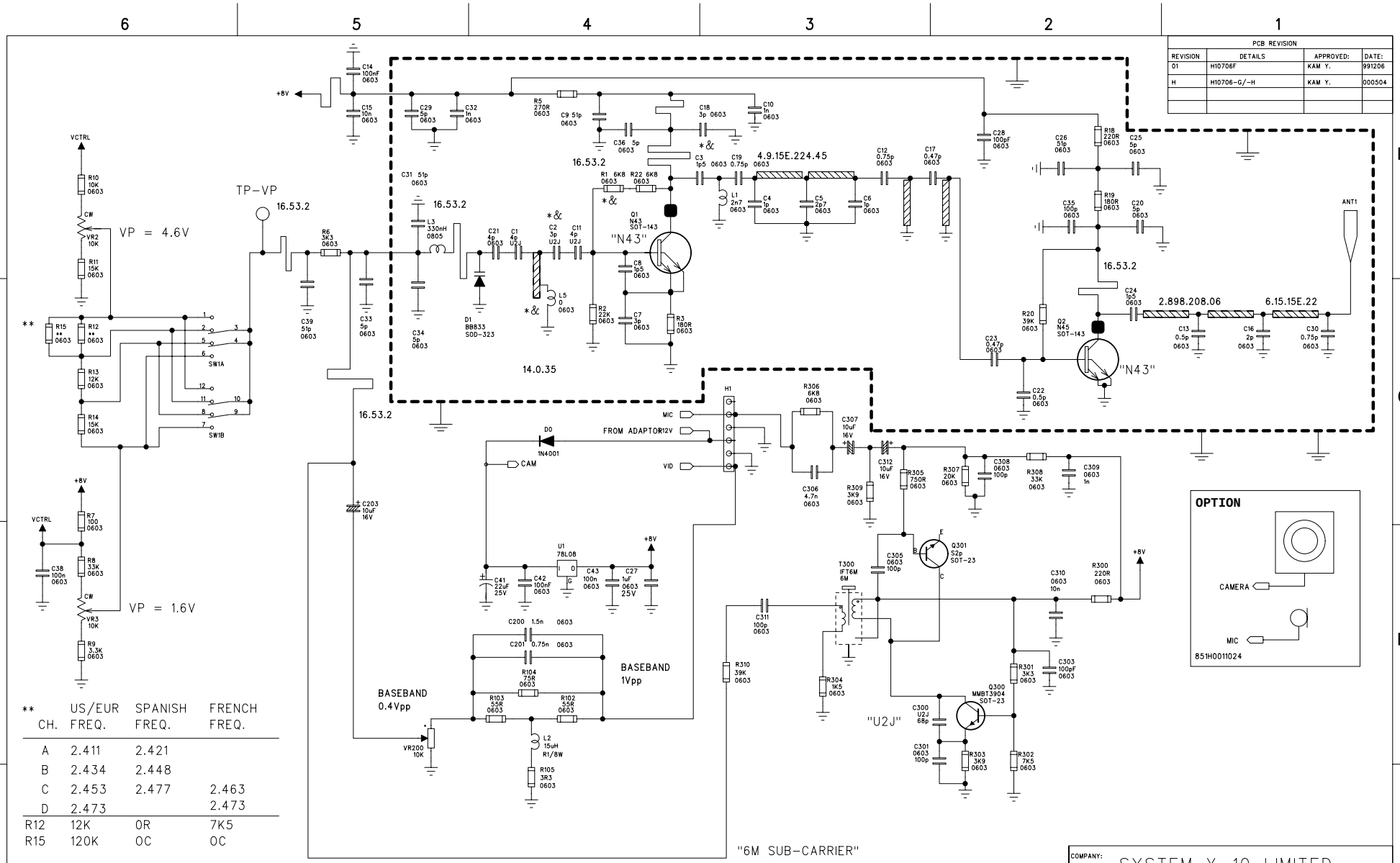

PCB REVISION			
REVISION	DETAILS	APPROVED:	DATE:
01	H10706F	KAM Y.	991206
H	H10706-G/-H	KAM Y.	000504

** CH.	US/EUR FREQ.	SPANISH FREQ.	FRENCH FREQ.
A	2.411	2.421	
B	2.434	2.448	
C	2.453	2.477	2.463
D	2.473		2.473
R12	12K	0R	7K5
R15	120K	0C	0C

Remark: 1. "OC"= Open Circuit 2. All SMD Cap are COG Type (Unless Specified.)

*& = TRIMMING VALUES

ECN	DESCRIPTION	BY	DATE

DESIGN BY: KAM Y.	DATED: 991214	COMPANY: SYSTEM X-10 LIMITED	
MODIFIED: KAM Y.	DATED: 000504	TITLE: 2.4G CAMERA TRANSMITTER	
QUALITY CONTROL:	DATED:	CODE: 90 / SIZE: A4 / DRAWING NO: SCH.CAMTX1H1	REV: 03
RELEASED:	DATED:	SCALE: NIS	SHEET: 1 OF 1

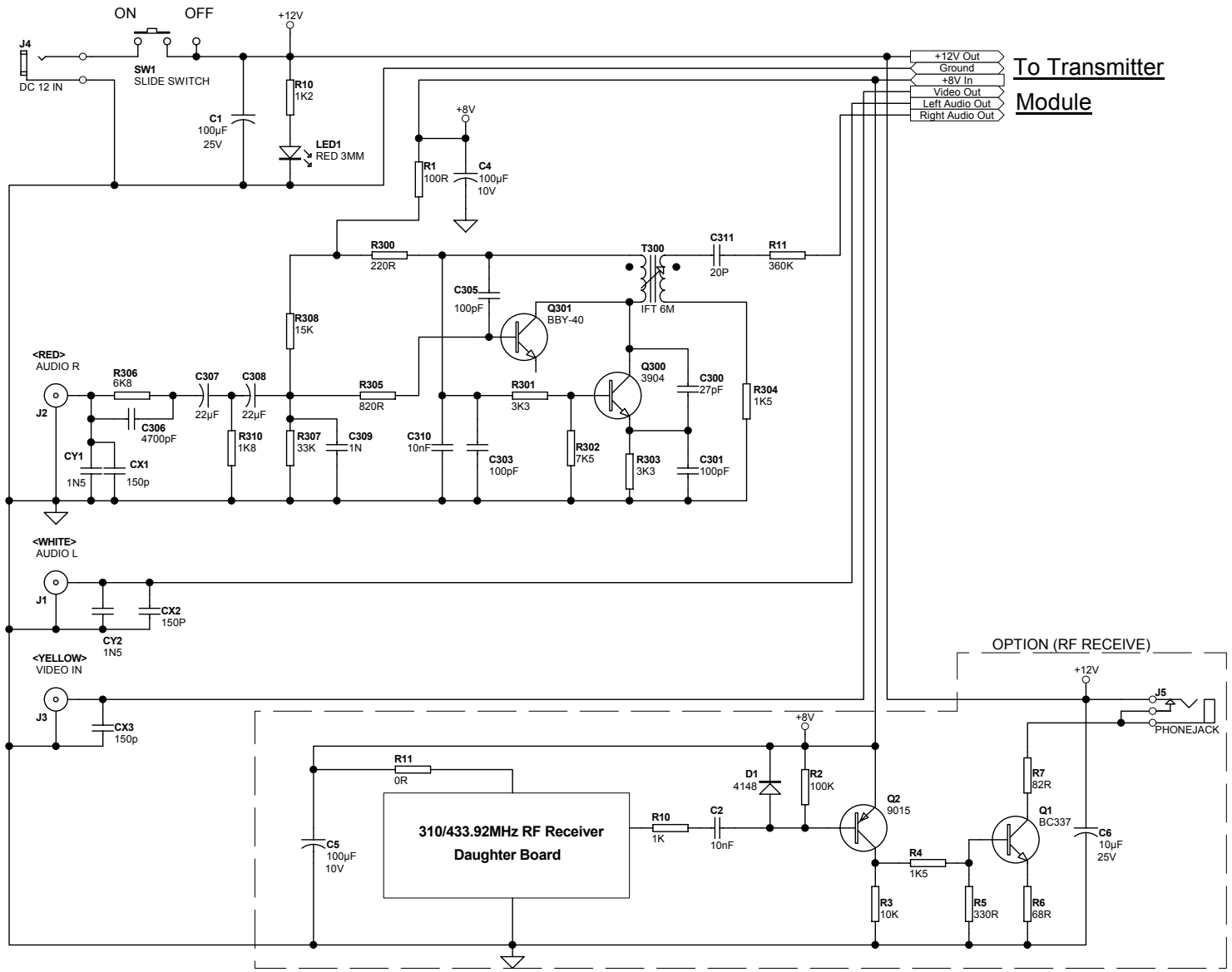

Error : X-10.BMP File Not Found

SYSTEM X-10 LIMITED	
Title: ***2.4GHz VIDEO SENDER (MINI)***	
Number: **851001H11137**	Revision: **C**
File Name: **Y:\JOSEPH\MINITX_C.SCH**	
Date: **3-Sep-2001**	Drawn By: *Ian Wong* / Sheet **1** of **1**