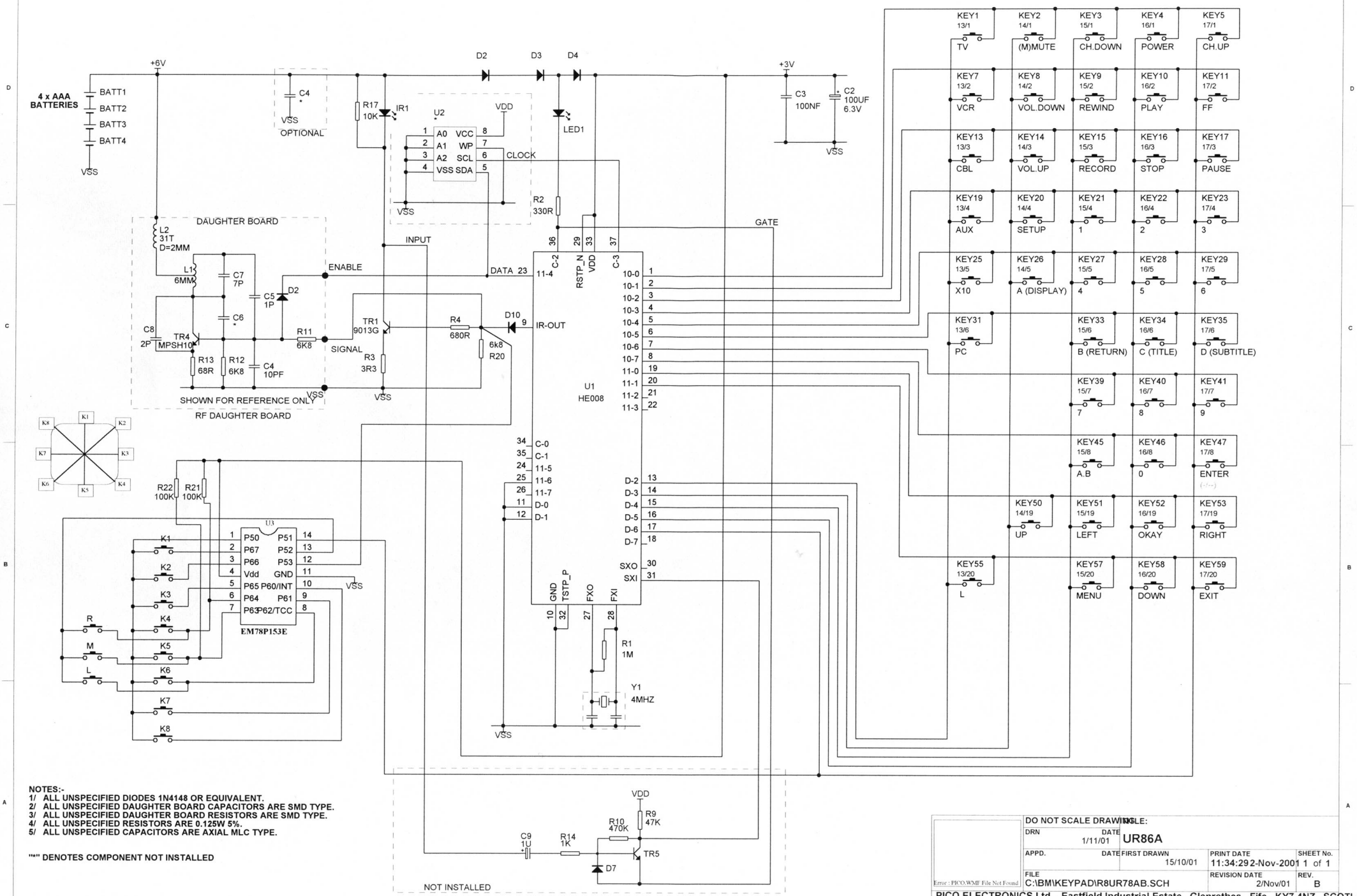

NOTES:-
1/ ALL UNSPECIFIED DIODES 1N4148 OR EQUIVALENT.
2/ ALL UNSPECIFIED DAUGHTER BOARD CAPACITORS ARE SMD TYPE.
3/ ALL UNSPECIFIED DAUGHTER BOARD RESISTORS ARE SMD TYPE.
4/ ALL UNSPECIFIED RESISTORS ARE 0.125W 5%.
5/ ALL UNSPECIFIED CAPACITORS ARE AXIAL MLC TYPE.

"*" DENOTES COMPONENT NOT INSTALLED

DO NOT SCALE DRAWING	TITLE:		
DRN	DATE 1/11/01	UR86A	
APPD.	DATE	FIRST DRAWN 15/10/01	PRINT DATE 11:34:29 2-Nov-2001 / SHEET No. 1 of 1
FILE C:\BM\KEYPAD\R8UR78AB.SCH		REVISION DATE 2/Nov/01	REV. B

Error : PICO.WMF File Not Found

PICO ELECTRONICS Ltd., Eastfield Industrial Estate, Glenrothes, Fife, KY7 4NZ, SCOTLAND