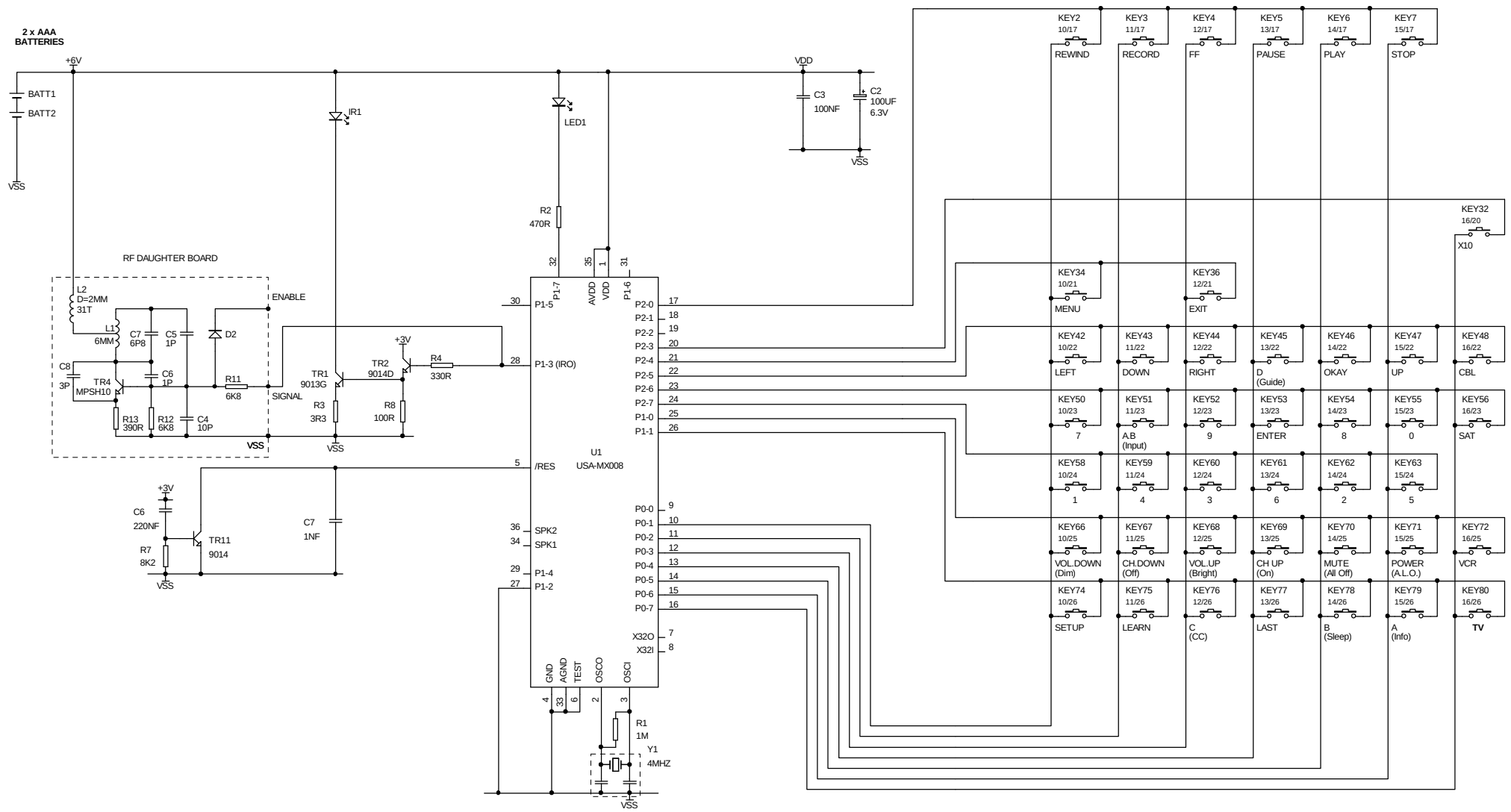

NOTES:-
1/ ALL UNSPECIFIED DIODES 1N4148 OR EQUIVALENT.
2/ ALL UNSPECIFIED CAPACITORS ARE SMD TYPE.
3/ ALL UNSPECIFIED RESISTORS ARE SMD TYPE.

"*" DENOTES COMPONENT NOT INSTALLED

Error : PICO.WMF File Not Found	DO NOT SCALE DRAWING	TITLE:	
	DRN BKW DATE 5/12/06	USA UR73A IR REMOTE	
	APPD. DATE	FIRST DRAWN 5/12/06	PRINT DATE 09:40:57 2-Feb-2007 / SHEET No. 1 of 1
	FILE D:\IAN\SCH\UR73AMA.SCH	REVISION DATE 5/12/06	REV. A
	PICO ELECTRONICS Ltd., Eastfield Industrial Estate, Glenrothes, Fife, KY7 4NZ, SCOTLAND		