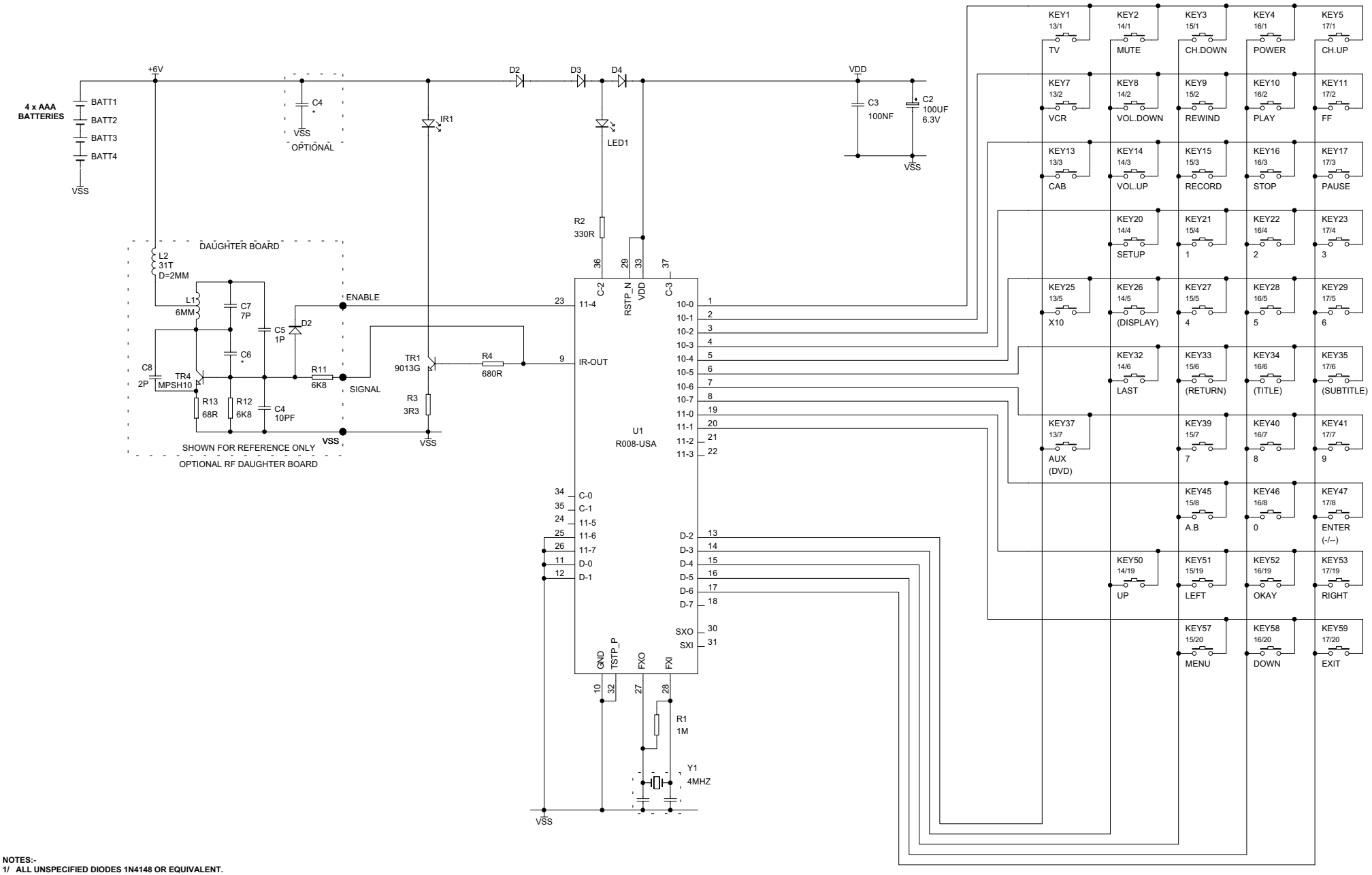

NOTES:-

1/ ALL UNSPECIFIED DIODES 1N4148 OR EQUIVALENT.
2/ ALL UNSPECIFIED DAUGHTER BOARD CAPACITORS ARE SMD TYPE.
3/ ALL UNSPECIFIED DAUGHTER BOARD RESISTORS ARE SMD TYPE.
4/ ALL UNSPECIFIED RESISTORS ARE 0.125W 5%.
5/ ALL UNSPECIFIED CAPACITORS ARE AXIAL MLC TYPE.

"*" DENOTES COMPONENT NOT INSTALLED

Error : PICO.WMF File Not Found	DO NOT SCALE DRAWING	TITLE:	
	DRN BKW DATE 9/8/00	X10 UR73/74 IR REMOTE	
	APPD. DATE	FIRST DRAWN 9/8/00	PRINT DATE 11:14:41 21-Aug-2000 / SHEET No. 1 of 1
	FILE D:\DATA\SCH\R8-UR74A.SCH	REVISION DATE 9/8/00	REV. A

PICO ELECTRONICS Ltd., Eastfield Industrial Estate, Glenrothes, Fife, KY7 4NZ, SCOTLAND